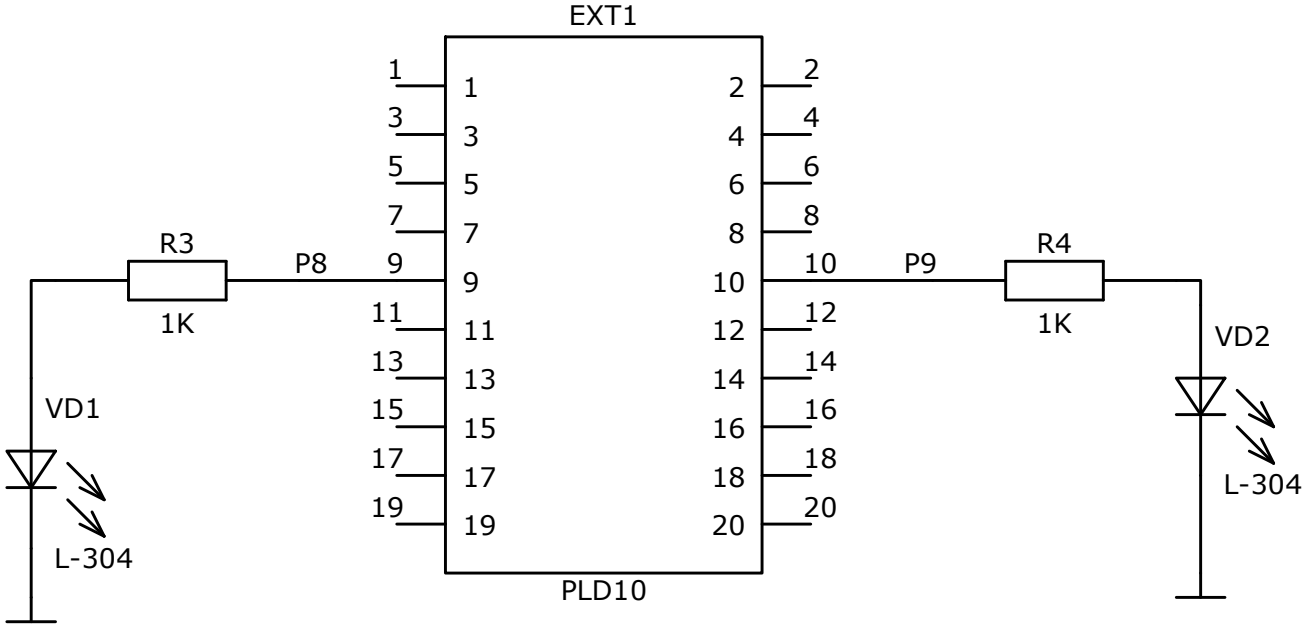
EXT1
R3
1K
P8
P9
R4
1K
VD1
L-304
VD2
L-304
PLD10

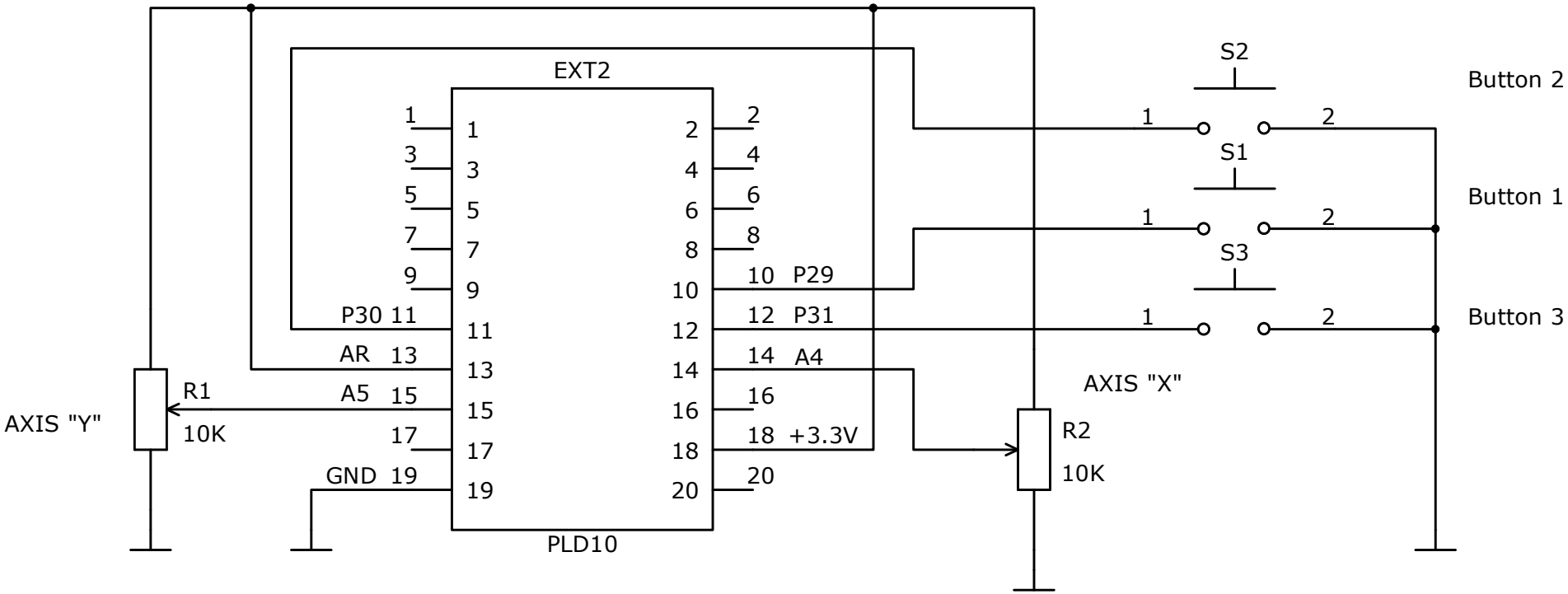
EXT2
S2
Button 2
S1
Button 1
S3
Button 3
P29
P31
A4
+3.3V
P30
AR
A5
GND
R1
10K
AXIS "Y"
AXIS "X"
R2
10K
PLD10