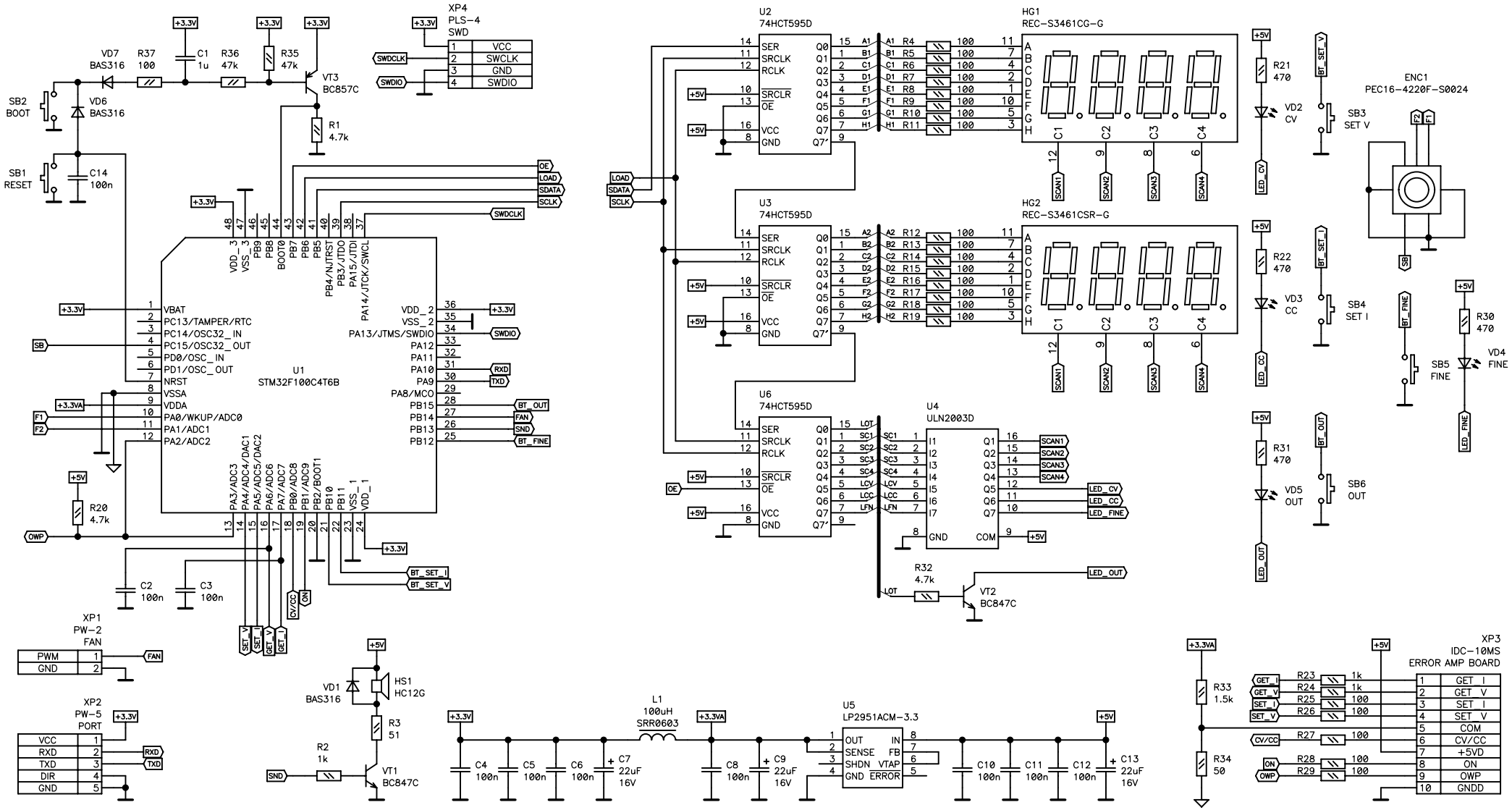

Company Name	NSM lab		
Size A35	Title PSL-3604 (front panel board)		Rev A
Date Tue Apr 16, 2013		Drawn by NSM lab	
Filename PSL-3604_pan.sch		Sheet 1 of 1	