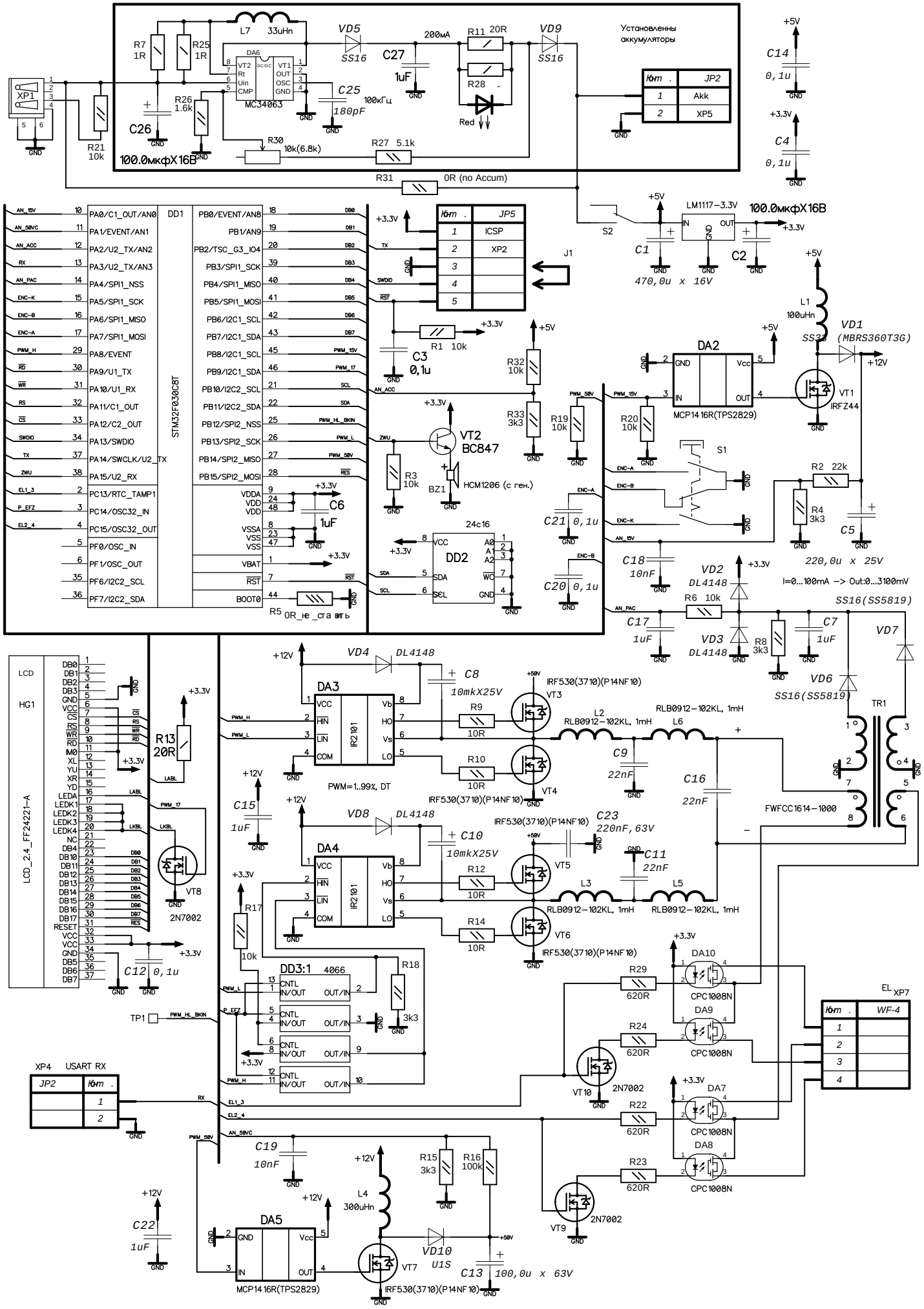

Установленны аккумуляторы
Ком. JP2
1 Akk
2 XP5
XP1
R7 1R
R25 1R
L7 33uHn
DA6
MC34063
VT2 Rt Uin CMP
VT1 OUT OSC GND
VD5 SS16
C27 1uF
200мА
R11 20R
R28
Red
VD9 SS16
C25 180pF
100кГц
R26 1.6k
C26
100.0мкфХ16В
R21 10k
R30 10k(6.8k)
R27 5.1k
R31 0R (по Accum)
C14 0,1u
C4 0,1u
+5V
+3.3V
GND
DD1
STM32F030C8T
PA0/C1_OUT/AN0
PA1/EVENT/AN1
PA2/U2_TX/AN2
PA3/U2_TX/AN3
PA4/SPI1_NSS
PA5/SPI1_SCK
PA6/SPI1_MISO
PA7/SPI1_MOSI
PA8/EVENT
PA9/U1_TX
PA10/U1_RX
PA11/C1_OUT
PA12/C2_OUT
PA13/SWDIO
PA14/SWCLK/U2_TX
PA15/U2_RX
PC13/RTC_TAMP1
PC14/OSC32_IN
PC15/OSC32_OUT
PF0/OSC_IN
PF1/OSC_OUT
PF6/I2C2_SCL
PF7/I2C2_SDA
PB0/EVENT/AN8
PB1/AN9
PB2/TSC_G3_IO4
PB3/SPI1_SCK
PB4/SPI1_MISO
PB5/SPI1_MOSI
PB6/I2C1_SCL
PB7/I2C1_SDA
PB8/I2C1_SCL
PB9/I2C1_SDA
PB10/I2C2_SCL
PB11/I2C2_SDA
PB12/SPI2_NSS
PB13/SPI2_SCK
PB14/SPI2_MISO
PB15/SPI2_MOSI
VDDA VDD VDD
VSSA VSS VSS
VBAT
RST
BOOT0
C6 1uF
R5 0R_не_ставить
Ком. JP5
1 ICSP
2 XP2
J1
R1 10k
C3 0,1u
R32 10k
R33 3k3
VT2 BC847
R3 10k
BZ1 HCM1206 (с ген.)
24c16
DD2
VCC SDA SCL A0 A1 A2 WC GND
S2
LM1117-3.3V
IN OUT
C1 470,0u x 16V
C2 100.0мкфХ16В
L1 100uHn
VD1 (MBRS360T3G)
SS33
DA2
MCP1416R(TPS2829)
VT1 IRFZ44
R19 10k
R20 10k
S1
R2 22k
R4 3k3
C5 220,0u x 25V
C21 0,1u
C20 0,1u
C18 10nF
VD2 DL4148
R6 10k
I=0...100mA -> Out:0...3100mV
SS16(SS5819)
C17 1uF
VD3 DL4148
R8 3k3
C7 1uF
VD7
VD6 SS16(SS5819)
TR1
FWFCC1614-1000
LCD
HG1
LCD_2.4_FF24221-A
R13 20R
VT8 2N7002
C12 0,1u
VD4 DL4148
DA3
IR2101
C8 10mkX25V
R9 10R
R10 10R
IRF530(3710)(P14NF10)
VT3
VT4
L2 RLB0912-102KL, 1mH
L6 RLB0912-102KL, 1mH
C9 22nF
C16 22nF
PWM=1..99%, DT
C15 1uF
VD8 DL4148
DA4
C10 10mkX25V
R12 10R
R14 10R
VT5
VT6
C23 220nF, 63V
C11 22nF
L3 RLB0912-102KL, 1mH
L5 RLB0912-102KL, 1mH
R17 10k
DD3:1 4066
CNTL IN/OUT OUT/IN
R18 3k3
TP1
XP4 USART RX
JP2
Ком.
DA10 CPC1008N
DA9 CPC1008N
DA7 CPC1008N
DA8 CPC1008N
R29 620R
R24 620R
R22 620R
R23 620R
VT10 2N7002
VT9 2N7002
EL XP7
Ком. WF-4
C19 10nF
R15 3k3
R16 100k
L4 300uHn
DA5
MCP1416R(TPS2829)
VT7 IRF530(3710)(P14NF10)
VD10 U1S
C13 100,0u x 63V
C22 1uF