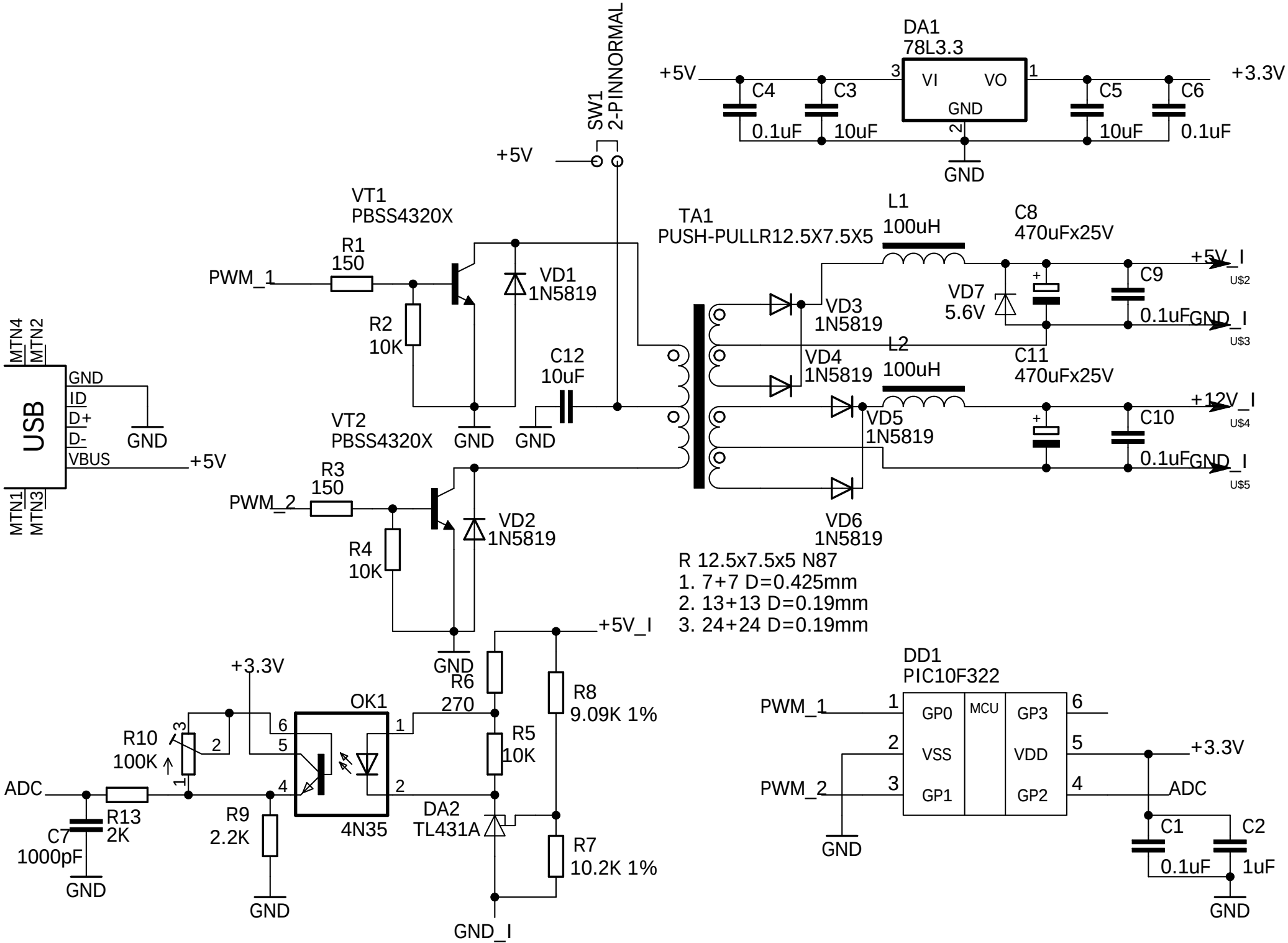
DA1
78L3.3
VI
VO
GND
+5V
+3.3V
C4
0.1uF
C3
10uF
C5
10uF
C6
0.1uF
SW1
2-PINNORMAL
VT1
PBSS4320X
R1
150
PWM_1
R2
10K
VD1
1N5819
C12
10uF
VT2
PBSS4320X
R3
150
PWM_2
R4
10K
VD2
1N5819
TA1
PUSH-PULLR12.5X7.5X5
L1
100uH
L2
100uH
C8
470uFx25V
C11
470uFx25V
VD3
1N5819
VD4
1N5819
VD5
1N5819
VD6
1N5819
VD7
5.6V
C9
0.1uF
C10
0.1uF
+5V_I
GND_I
+12V_I
U$2
U$3
U$4
U$5
USB
MTN4
MTN2
MTN1
MTN3
GND
ID
D+
D-
VBUS
R 12.5x7.5x5 N87
1. 7+7 D=0.425mm
2. 13+13 D=0.19mm
3. 24+24 D=0.19mm
OK1
4N35
R6
270
R5
10K
R8
9.09K 1%
R7
10.2K 1%
DA2
TL431A
R10
100K
R13
2K
R9
2.2K
C7
1000pF
ADC
DD1
PIC10F322
GP0
VSS
GP1
MCU
GP3
VDD
GP2
C1
0.1uF
C2
1uF