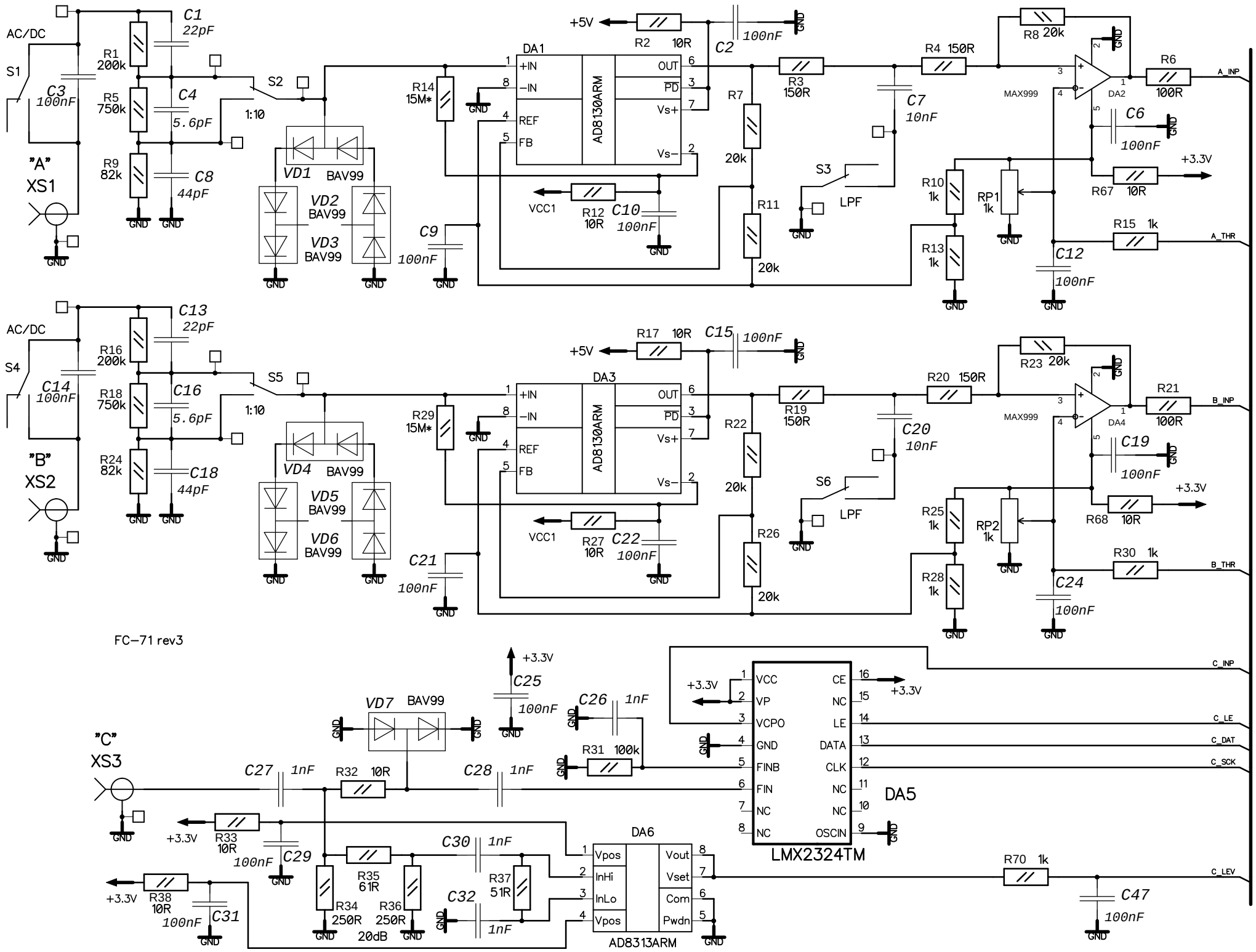
AC/DC
S1
C3 100nF
R1 200k
R5 750k
R9 82k
C1 22pF
C4 5.6pF
C8 44pF
"A"
XS1
S2
1:10
VD1 BAV99
VD2 BAV99
VD3 BAV99
R14 15M*
C9 100nF
DA1
AD8130ARM
+IN
−IN
REF
FB
OUT
PD
Vs+
Vs−
+5V
R2 10R
C2 100nF
VCC1
R12 10R
C10 100nF
R7 20k
R11 20k
R3 150R
C7 10nF
S3
LPF
R4 150R
R8 20k
MAX999
DA2
R6 100R
C6 100nF
R67 10R
+3.3V
R10 1k
RP1 1k
R13 1k
R15 1k
C12 100nF
A_INP
A_THR
AC/DC
S4
C14 100nF
R16 200k
R18 750k
R24 82k
C13 22pF
C16 5.6pF
C18 44pF
"B"
XS2
S5
1:10
VD4 BAV99
VD5 BAV99
VD6 BAV99
R29 15M*
C21 100nF
DA3
AD8130ARM
R17 10R
C15 100nF
VCC1
R27 10R
C22 100nF
R22 20k
R26 20k
R19 150R
C20 10nF
S6
LPF
R20 150R
R23 20k
MAX999
DA4
R21 100R
C19 100nF
R68 10R
+3.3V
R25 1k
RP2 1k
R28 1k
R30 1k
C24 100nF
B_INP
B_THR
FC−71 rev3
+3.3V
C25 100nF
VD7 BAV99
C26 1nF
R31 100k
"C"
XS3
C27 1nF
R32 10R
C28 1nF
+3.3V
R33 10R
C29 100nF
R35 61R
C30 1nF
R37 51R
R34 250R
R36 250R
20dB
C32 1nF
+3.3V
R38 10R
C31 100nF
DA6
AD8313ARM
Vpos
InHi
InLo
Vpos
Vout
Vset
Com
Pwdn
VCC
VP
VCPO
GND
FINB
FIN
NC
CE
LE
DATA
CLK
OSCIN
DA5
LMX2324TM
C_INP
C_LE
C_DAT
C_SCK
R70 1k
C47 100nF
C_LEV
GND

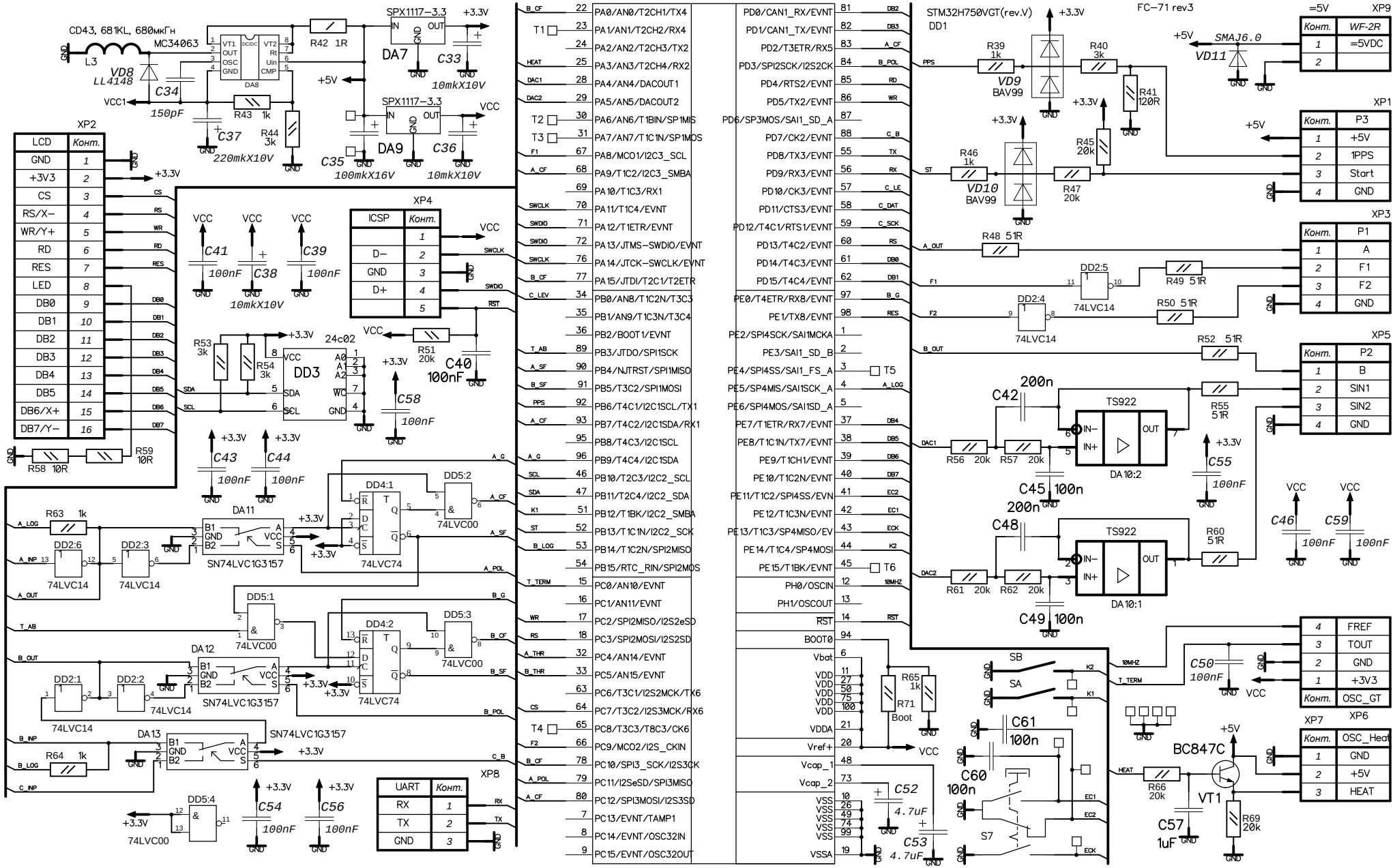
STM32H750VGT(rev.V)
DD1
FC-71 rev3
CD43, 681KL, 680мкГн
MC34063
SPX1117-3.3
DA7
DA9
DA8
XP2
LCD
XP4
ICSP
XP8
UART
XP9
WF-2R
XP1
P3
XP3
P1
XP5
P2
XP6
XP7
DA10:1
DA10:2
DA11
DA12
DA13
DD2:1
DD2:2
DD2:3
DD2:4
DD2:5
DD3
DD4:1
DD4:2
DD5:1
DD5:2
DD5:3
DD5:4
74LVC14
74LVC00
74LVC74
SN74LVC1G3157
TS922
BC847C
VT1
VD8
LL4148
VD9
BAV99
VD10
BAV99
VD11
SMAJ6.0
SB
SA
S7
Boot
PA0/AN0/T2CH1/TX4
PA1/AN1/T2CH2/RX4
PA2/AN2/T2CH3/TX2
PA3/AN3/T2CH4/RX2
PA4/AN4/DACOUT1
PA5/AN5/DACOUT2
PA6/AN6/T1BIN/SP1MIS
PA7/AN7/T1C1N/SP1MOS
PA8/MCO1/I2C3_SCL
PA9/T1C2/I2C3_SMBA
PA10/T1C3/RX1
PA11/T1C4/EVNT
PA12/T1ETR/EVNT
PA13/JTMS-SWDIO/EVNT
PA14/JTCK-SWCLK/EVNT
PA15/JTDI/T2C1/T2ETR
PB0/AN8/T1C2N/T3C3
PB1/AN9/T1C3N/T3C4
PB2/BOOT1/EVNT
PB3/JTDO/SPI1SCK
PB4/NJTRST/SPI1MISO
PB5/T3C2/SPI1MOSI
PB6/T4C1/I2C1SCL/TX1
PB7/T4C2/I2C1SDA/RX1
PB8/T4C3/I2C1SCL
PB9/T4C4/I2C1SDA
PB10/T2C3/I2C2_SCL
PB11/T2C4/I2C2_SDA
PB12/T1BK/I2C2_SMBA
PB13/T1C1N/I2C2_SCK
PB14/T1C2N/SPI2MISO
PB15/RTC_RIN/SPI2MOS
PC0/AN10/EVNT
PC1/AN11/EVNT
PC2/SPI2MISO/I2S2eSD
PC3/SPI2MOSI/I2S2SD
PC4/AN14/EVNT
PC5/AN15/EVNT
PC6/T3C1/I2S2MCK/TX6
PC7/T3C2/I2S3MCK/RX6
PC8/T3C3/T8C3/CK6
PC9/MCO2/I2S_CKIN
PC10/SPI3_SCK/I2S3CK
PC11/I2SeSD/SPI3MISO
PC12/SPI3MOSI/I2S3SD
PC13/EVNT/TAMP1
PC14/EVNT/OSC32IN
PC15/EVNT/OSC32OUT
PD0/CAN1_RX/EVNT
PD1/CAN1_TX/EVNT
PD2/T3ETR/RX5
PD3/SPI2SCK/I2S2CK
PD4/RTS2/EVNT
PD5/TX2/EVNT
PD6/SP3MOS/SAI1_SD_A
PD7/CK2/EVNT
PD8/TX3/EVNT
PD9/RX3/EVNT
PD10/CK3/EVNT
PD11/CTS3/EVNT
PD12/T4C1/RTS1/EVNT
PD13/T4C2/EVNT
PD14/T4C3/EVNT
PD15/T4C4/EVNT
PE0/T4ETR/RX8/EVNT
PE1/TX8/EVNT
PE2/SPI4SCK/SAI1MCKA
PE3/SAI1_SD_B
PE4/SPI4SS/SAI1_FS_A
PE5/SP4MIS/SAI1SCK_A
PE6/SPI4MOS/SAI1SD_A
PE7/T1ETR/RX7/EVNT
PE8/T1C1N/TX7/EVNT
PE9/T1CH1/EVNT
PE10/T1C2N/EVNT
PE11/T1C2/SPI4SS/EVN
PE12/T1C3N/EVNT
PE13/T1C3/SP4MISO/EV
PE14/T1C4/SP4MOSI
PE15/T1BK/EVNT
PH0/OSCIN
PH1/OSCOUT
RST
BOOT0
Vbat
VDD
VDDA
Vref+
Vcap_1
Vcap_2
VSS
VSSA
VCC
GND
+3.3V
+5V
=5V
C42 200n
C48 200n
C45 100n
C49 100n
C60 100n
C61 100n
C52 4.7uF
C53 4.7uF
C57 1uF
C50 100nF
C46 100nF
C59 100nF
C55 100nF
C40 100nF
C58 100nF
C41 100nF
C38 10mkX10V
C39 100nF
C43 100nF
C44 100nF
C54 100nF
C56 100nF
C33 10mkX10V
C36 10mkX10V
C35 100mkX16V
C37 220mkX10V
C34 150pF
R42 1R
R43 1k
R44 3k
R39 1k
R40 3k
R41 120R
R45 20k
R46 1k
R47 20k
R48 51R
R49 51R
R50 51R
R52 51R
R55 51R
R56 20k
R57 20k
R60 51R
R61 20k
R62 20k
R66 20k
R69 20k
R71 1k
R65 1k
R53 3k
R54 3k
R51 20k
R59 10R
R58 10R
R63 1k
R64 1k