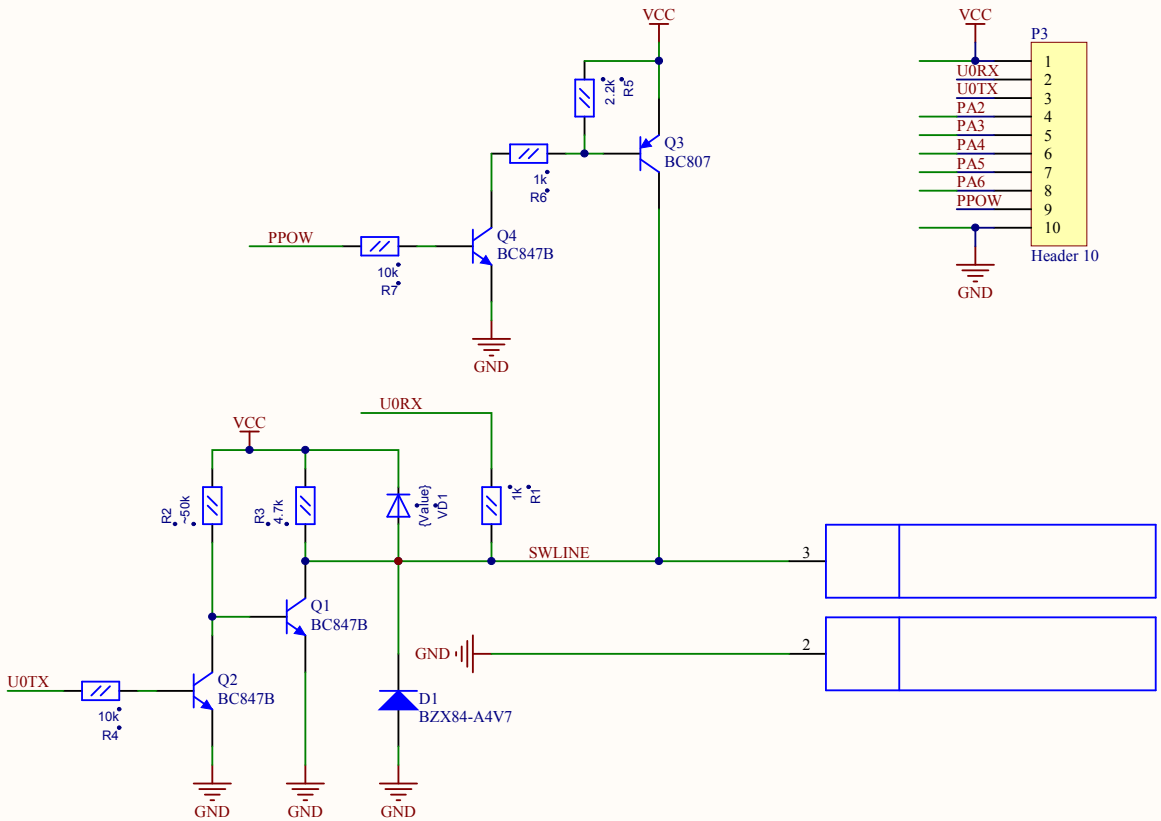

Title		
Size A4	Number	Revision
Date: 16.05.2012		Sheet of
File: C:\AVR\altium_ethdb1\Sheet3.SchDoc		Drawn By: