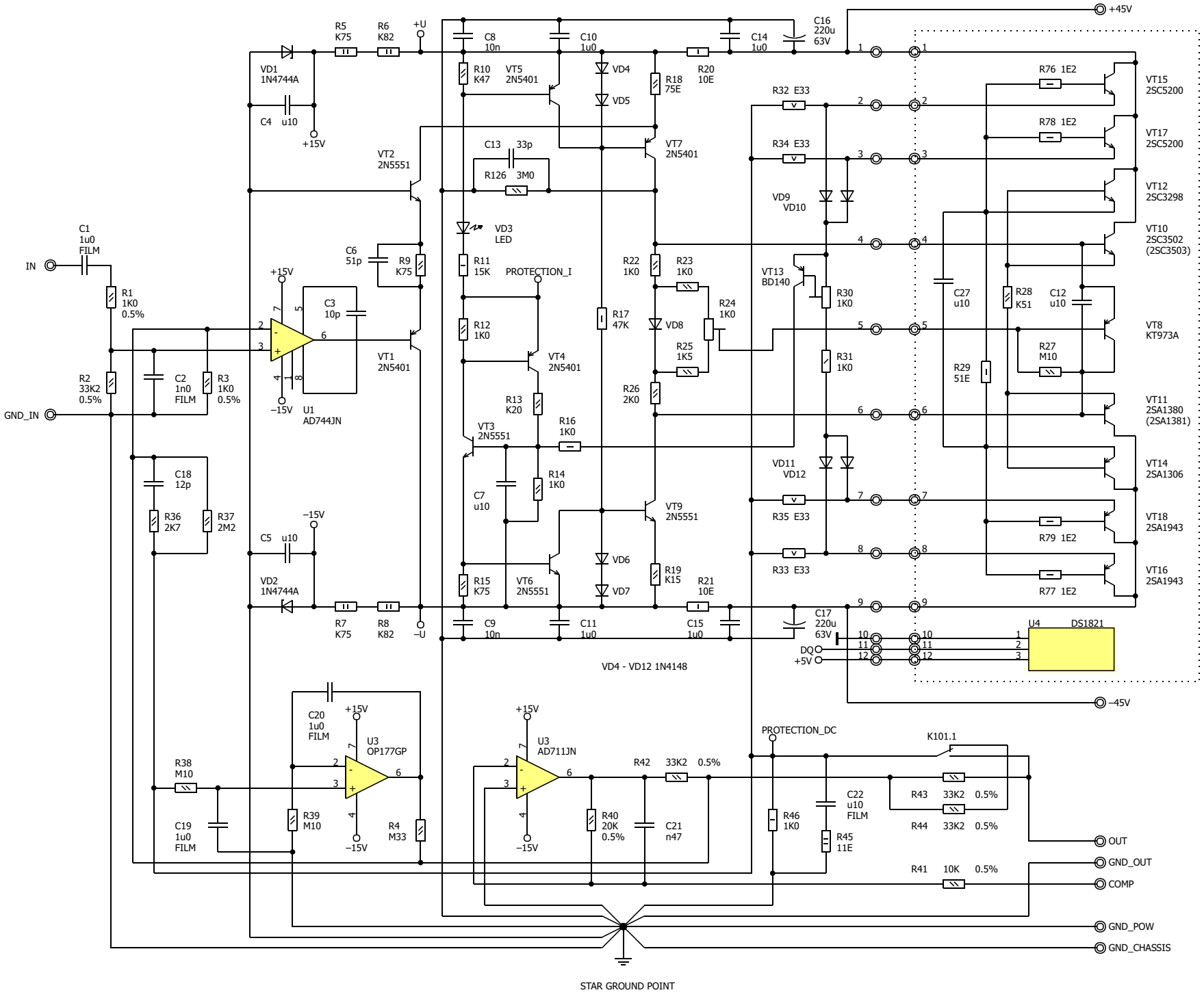
+45V
–45V
+U
–U
+15V
–15V
IN
GND_IN
C1 1u0 FILM
R1 1K0 0.5%
R2 33K2 0.5%
C2 1n0 FILM
R3 1K0 0.5%
C3 10p
U1 AD744JN
C6 51p
R9 K75
VT1 2N5401
VT2 2N5551
VD1 1N4744A
VD2 1N4744A
C4 u10
C5 u10
R5 K75
R6 K82
R7 K75
R8 K82
C8 10n
C9 10n
C10 1u0
C11 1u0
C14 1u0
C15 1u0
C16 220u 63V
C17 220u 63V
R10 K47
R11 15K
R12 1K0
R13 K20
R14 1K0
R15 K75
R16 1K0
VT3 2N5551
VT4 2N5401
VT5 2N5401
VT6 2N5551
VT7 2N5401
VT9 2N5551
VD3 LED
C13 33p
R126 3M0
PROTECTION_I
C7 u10
VD4
VD5
VD6
VD7
VD8
R17 47K
R18 75E
R19 K15
R20 10E
R21 10E
R22 1K0
R23 1K0
R24 1K0
R25 1K5
R26 2K0
VD4 - VD12 1N4148
R32 E33
R34 E33
R35 E33
R33 E33
VD9
VD10
VD11
VD12
VT13 BD140
R30 1K0
R31 1K0
C27 u10
R29 51E
R28 K51
C12 u10
R27 M10
R76 1E2
R78 1E2
R79 1E2
R77 1E2
VT15 2SC5200
VT17 2SC5200
VT12 2SC3298
VT10 2SC3502 (2SC3503)
VT8 KT973A
VT11 2SA1380 (2SA1381)
VT14 2SA1306
VT18 2SA1943
VT16 2SA1943
U4 DS1821
DQ
+5V
C18 12p
R36 2K7
R37 2M2
C20 1u0 FILM
U3 OP177GP
R38 M10
C19 1u0 FILM
R39 M10
R4 M33
U3 AD711JN
R42 33K2 0.5%
R40 20K 0.5%
C21 n47
PROTECTION_DC
K101.1
R43 33K2 0.5%
R44 33K2 0.5%
R41 10K 0.5%
R46 1K0
C22 u10 FILM
R45 11E
OUT
GND_OUT
COMP
GND_POW
GND_CHASSIS
STAR GROUND POINT

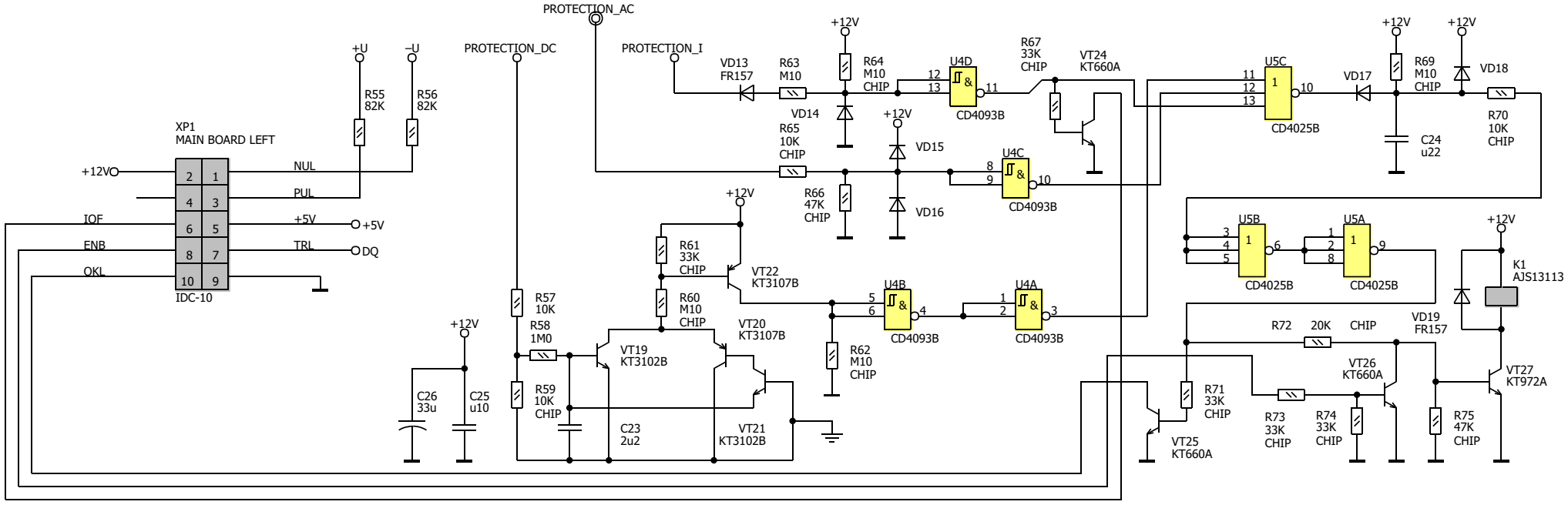

VD14-VD18 1N4148

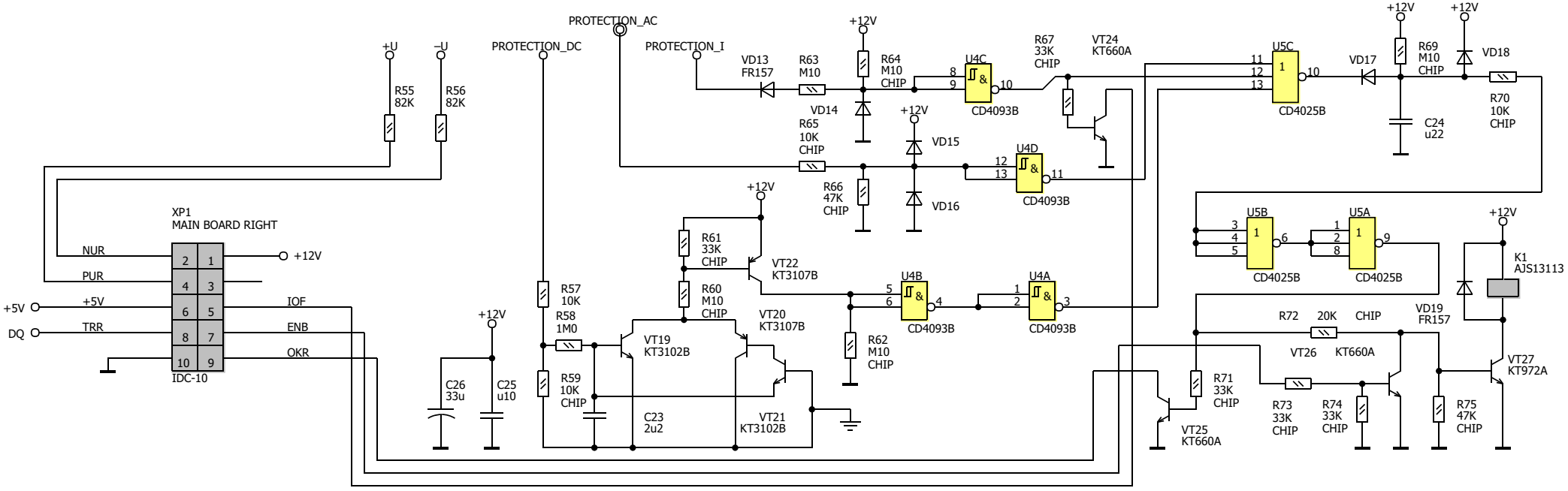

VD14-VD18 1N4148

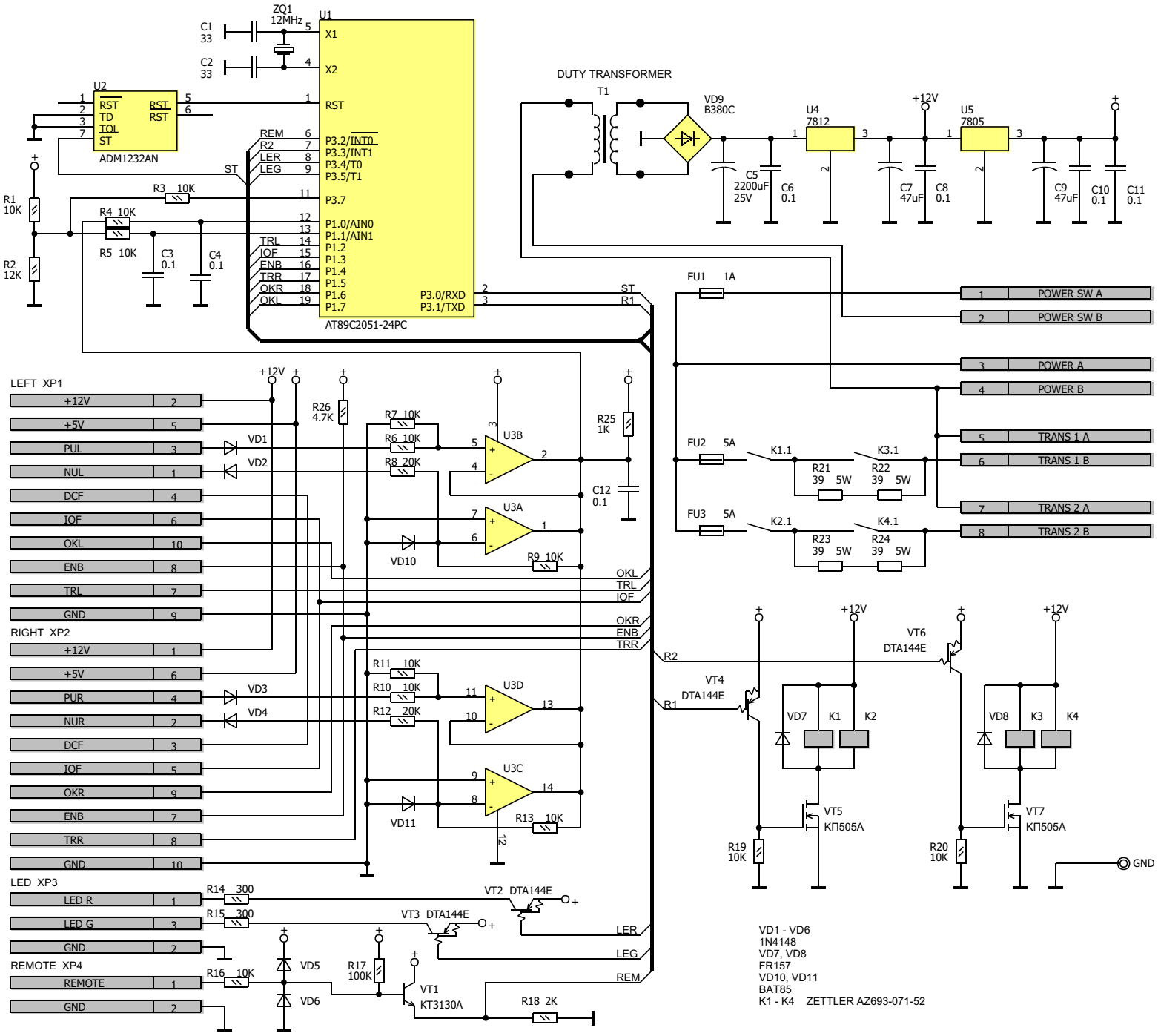
ZQ1
12MHz
C1
33
C2
33
U1
X1
X2
RST
P3.2/INT0
P3.3/INT1
P3.4/T0
P3.5/T1
P3.7
P1.0/AIN0
P1.1/AIN1
P1.2
P1.3
P1.4
P1.5
P1.6
P1.7
P3.0/RXD
P3.1/TXD
AT89C2051-24PC
U2
RST
TD
TOI
ST
ADM1232AN
REM
R2
LER
LEG
TRL
IOF
ENB
TRR
OKR
OKL
R1
10K
R2
12K
R3 10K
R4 10K
R5 10K
C3
0.1
C4
0.1
DUTY TRANSFORMER
T1
VD9
B380C
C5
2200uF
25V
C6
0.1
U4
7812
C7
47uF
C8
0.1
U5
7805
C9
47uF
C10
0.1
C11
0.1
+12V
FU1 1A
POWER SW A
POWER SW B
POWER A
POWER B
FU2 5A
K1.1
K3.1
R21
39 5W
R22
39 5W
TRANS 1 A
TRANS 1 B
FU3 5A
K2.1
K4.1
R23
39 5W
R24
39 5W
TRANS 2 A
TRANS 2 B
LEFT XP1
+12V
+5V
PUL
NUL
DCF
IOF
OKL
ENB
TRL
GND
RIGHT XP2
+12V
+5V
PUR
NUR
DCF
IOF
OKR
ENB
TRR
GND
VD1
VD2
VD3
VD4
R26
4.7K
R7 10K
R6 10K
R8 20K
U3B
U3A
VD10
R9 10K
R25
1K
C12
0.1
R11 10K
R10 10K
R12 20K
U3D
U3C
VD11
R13 10K
OKL
TRL
IOF
OKR
ENB
TRR
R2
R1
VT4
DTA144E
VT6
DTA144E
VD7
K1
K2
VD8
K3
K4
VT5
КП505A
VT7
КП505A
R19
10K
R20
10K
GND
LED XP3
LED R
LED G
GND
R14 300
R15 300
VT2 DTA144E
VT3 DTA144E
LER
LEG
REMOTE XP4
REMOTE
GND
R16 10K
VD5
VD6
R17
100K
VT1
KT3130A
R18 2K
REM
VD1 - VD6
1N4148
VD7, VD8
FR157
VD10, VD11
BAT85
K1 - K4 ZETTLER AZ693-071-52

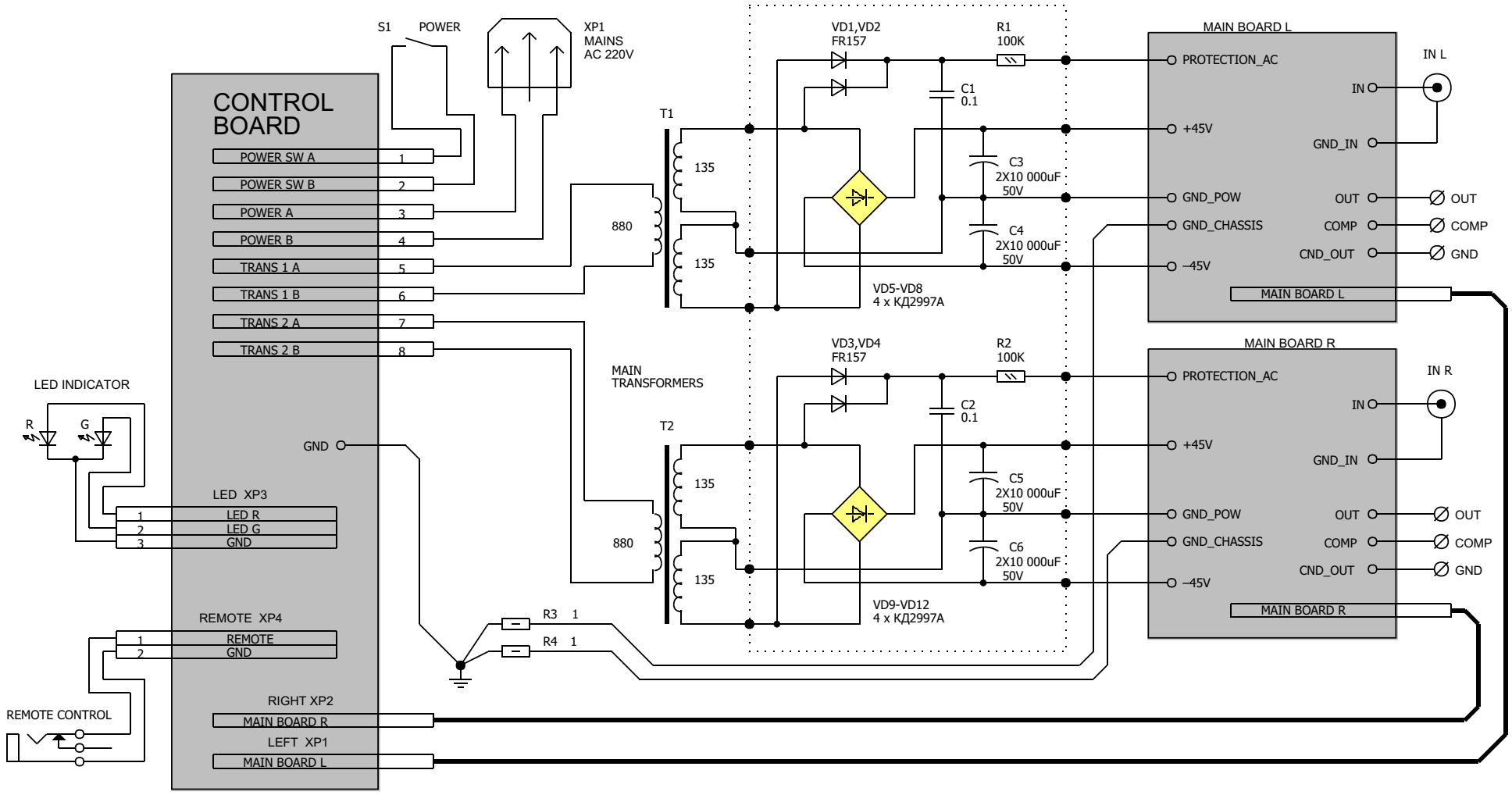
CONTROL BOARD
POWER SW A
POWER SW B
POWER A
POWER B
TRANS 1 A
TRANS 1 B
TRANS 2 A
TRANS 2 B
S1
POWER
XP1
MAINS
AC 220V
T1
T2
135
880
MAIN TRANSFORMERS
VD1,VD2
FR157
VD3,VD4
FR157
R1
100K
R2
100K
C1
0.1
C2
0.1
C3
2X10 000uF
50V
C4
2X10 000uF
50V
C5
2X10 000uF
50V
C6
2X10 000uF
50V
VD5-VD8
4 x КД2997A
VD9-VD12
4 x КД2997A
MAIN BOARD L
MAIN BOARD R
PROTECTION_AC
+45V
GND_POW
GND_CHASSIS
–45V
IN
GND_IN
OUT
COMP
CND_OUT
IN L
IN R
GND
LED INDICATOR
R
G
LED XP3
LED R
LED G
REMOTE XP4
REMOTE
REMOTE CONTROL
R3
R4
RIGHT XP2
LEFT XP1