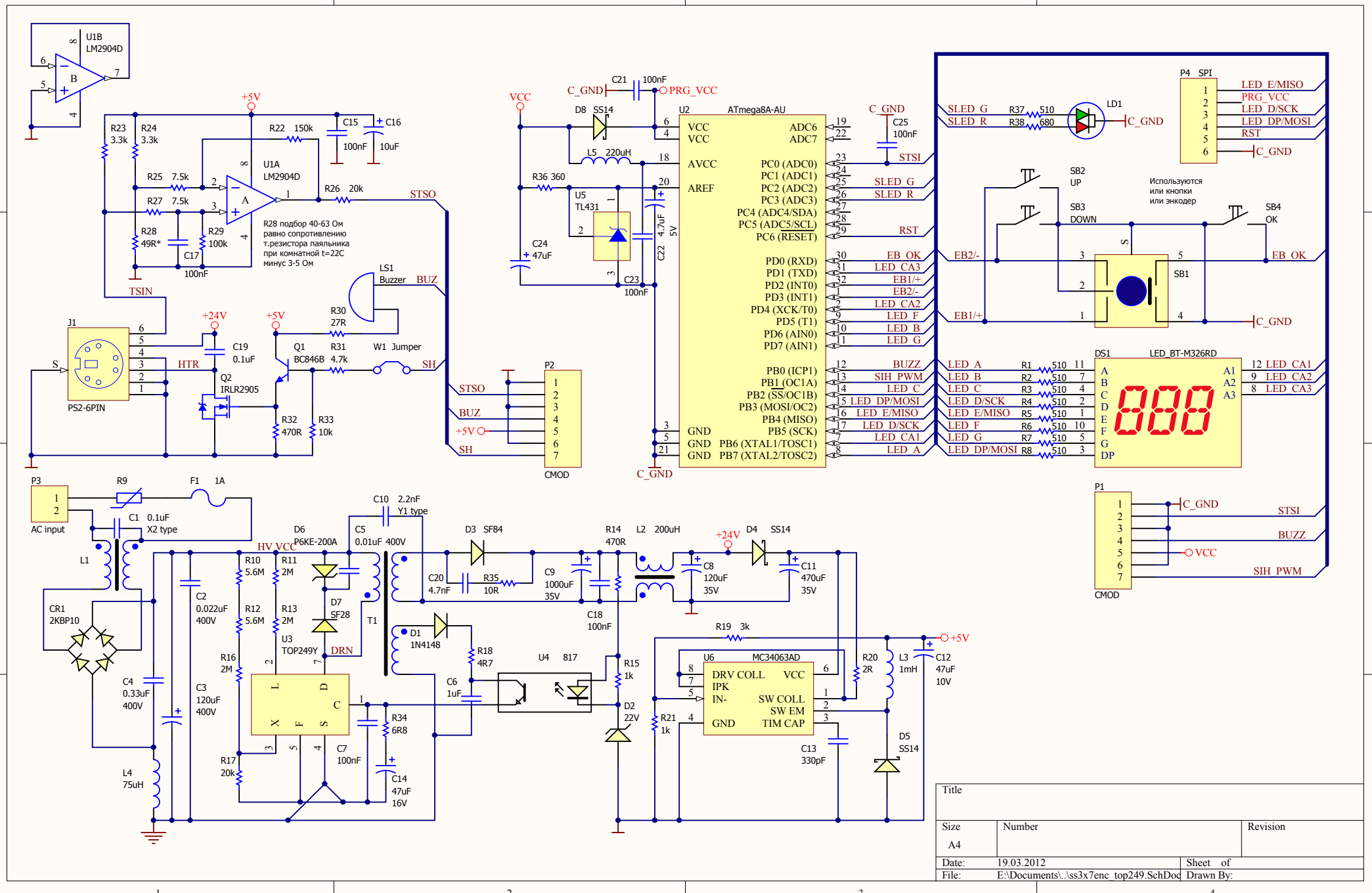

Title		
Size A4	Number	Revision
Date: 19.03.2012	Sheet of	
File: E:\Documents\..\ss3x7enc_top249.SchDoc	Drawn By:	

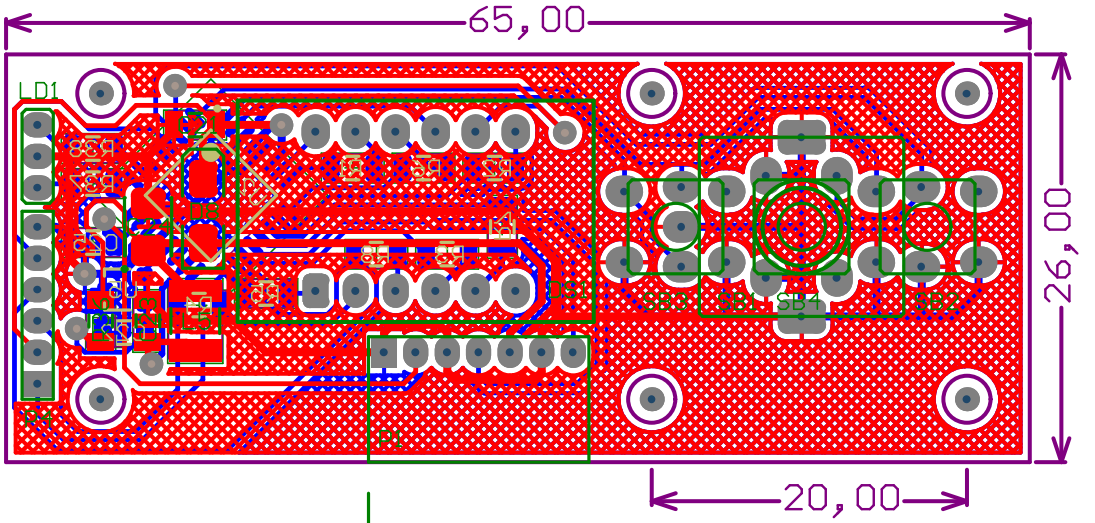
65,00
26,00
20,00
LD1
R4
R1
SB0
SB1
SB4
SB3

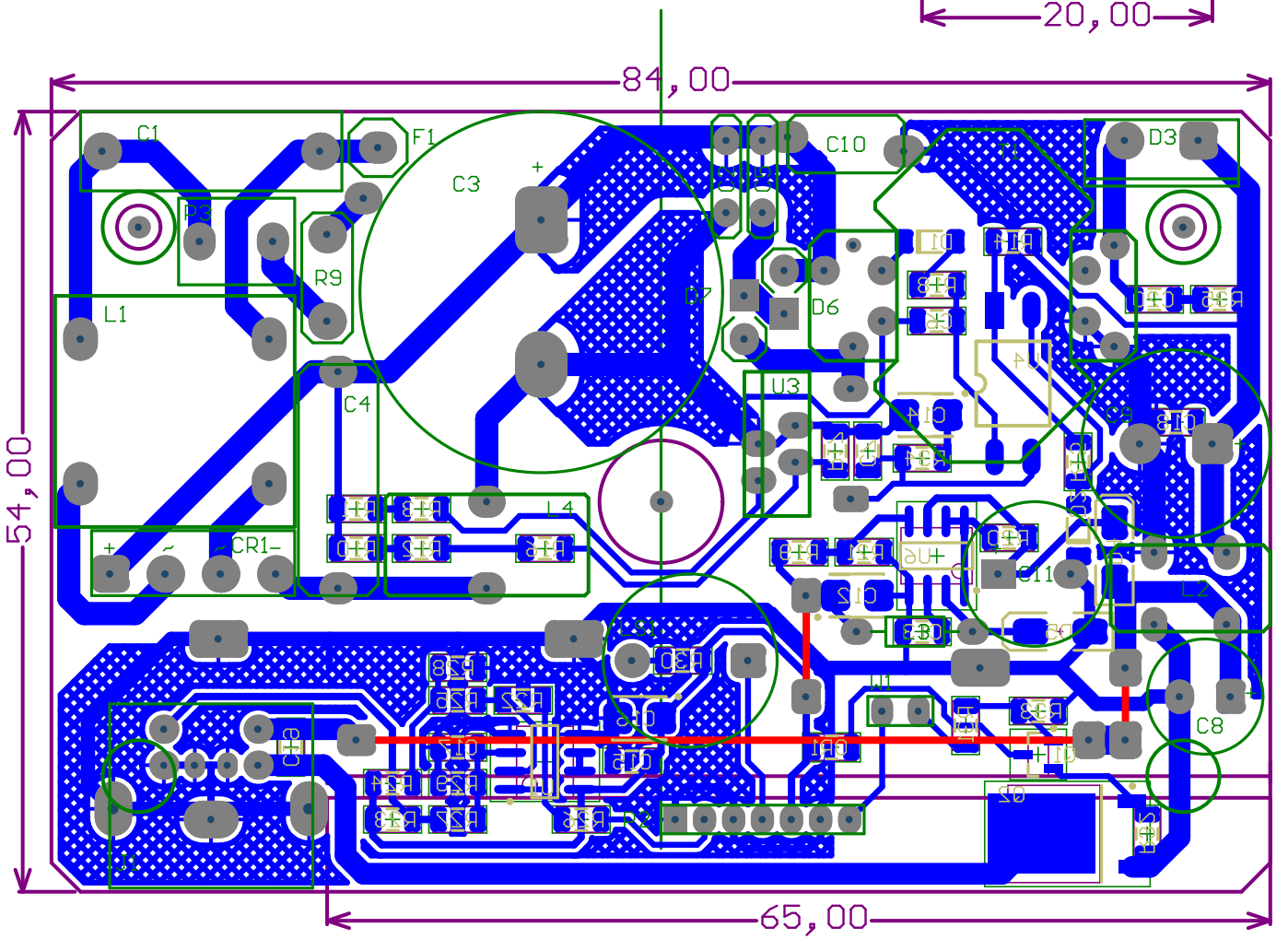
84,00
54,00
65,00
C1
F1
C3
C10
D3
R9
L1
C4
D6
U3
L4
CR1
C11
C8

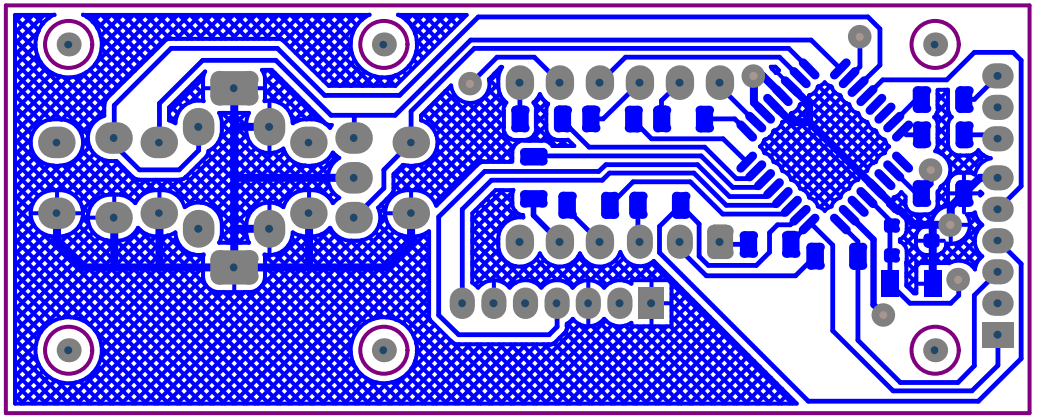

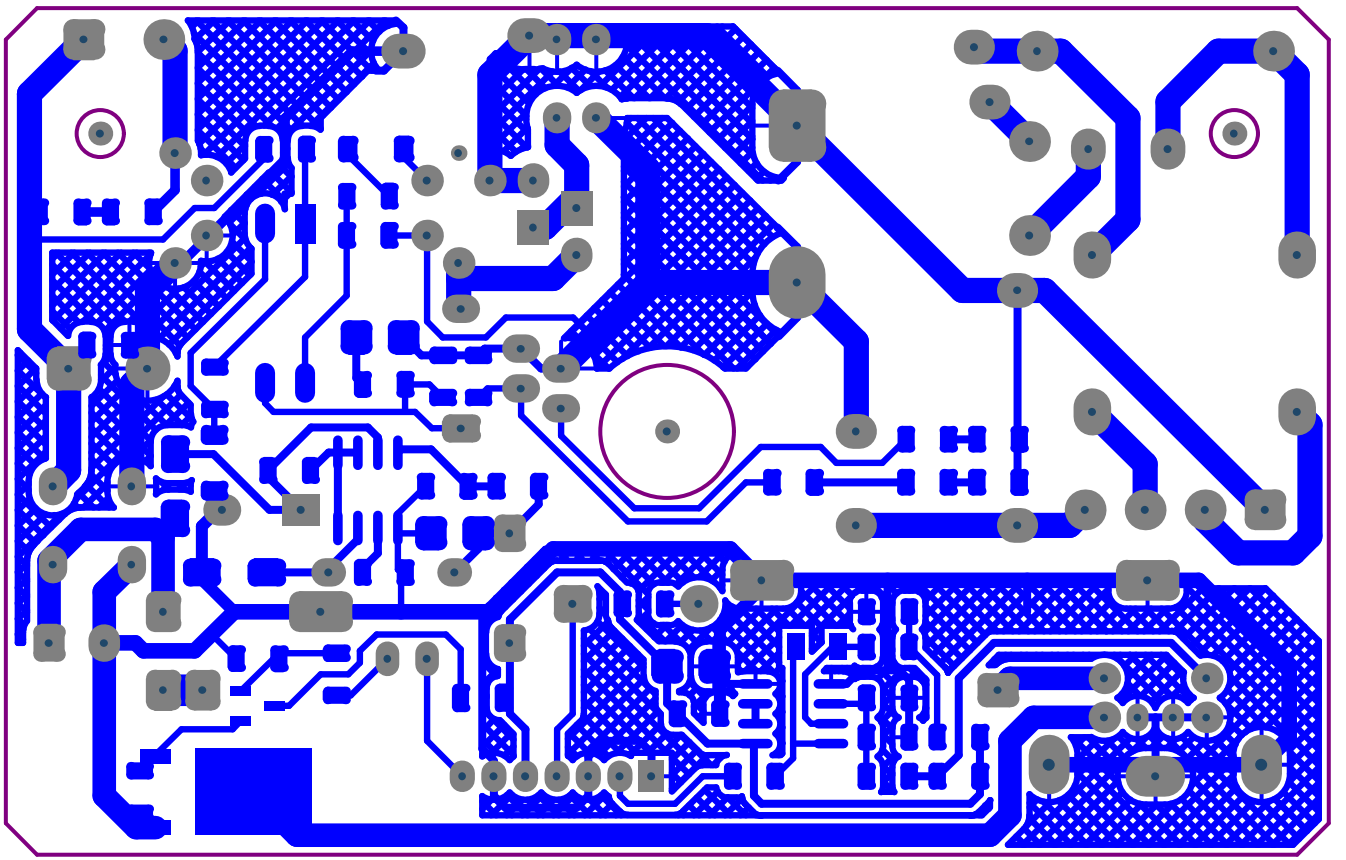

62,00
25,00
20,00
R2
R6
R1
R7
R3
R8
U2
R38
R37
C25
R5
R4
U5
C22

R14
D1
R35
C20
R18
C6
U4
C18
C14
R34
C7
R17
R15
D2
D4
R20
U6
R21
R19
C12
D5
C13
R16
R13
R11
R12
R10
R30
R28
R22
R25
C16
R33
R31
Q1
R0
C15
C17
C19
Q2
U1
R29
R24
R32
R26
R27
R23
62,00

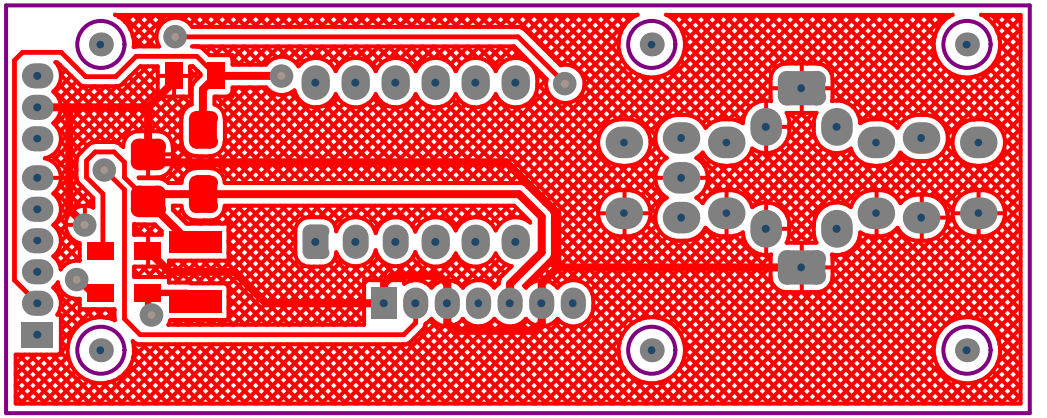

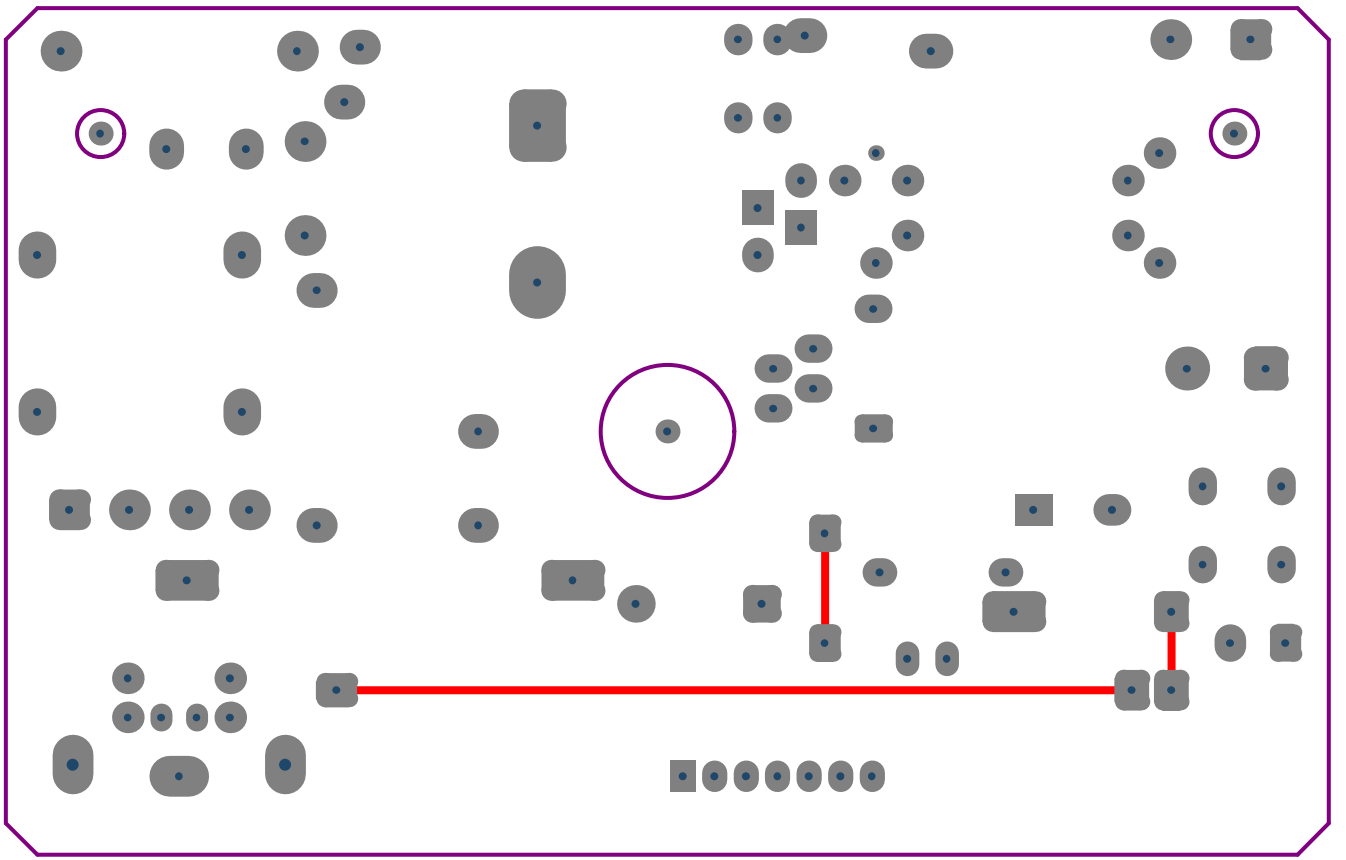

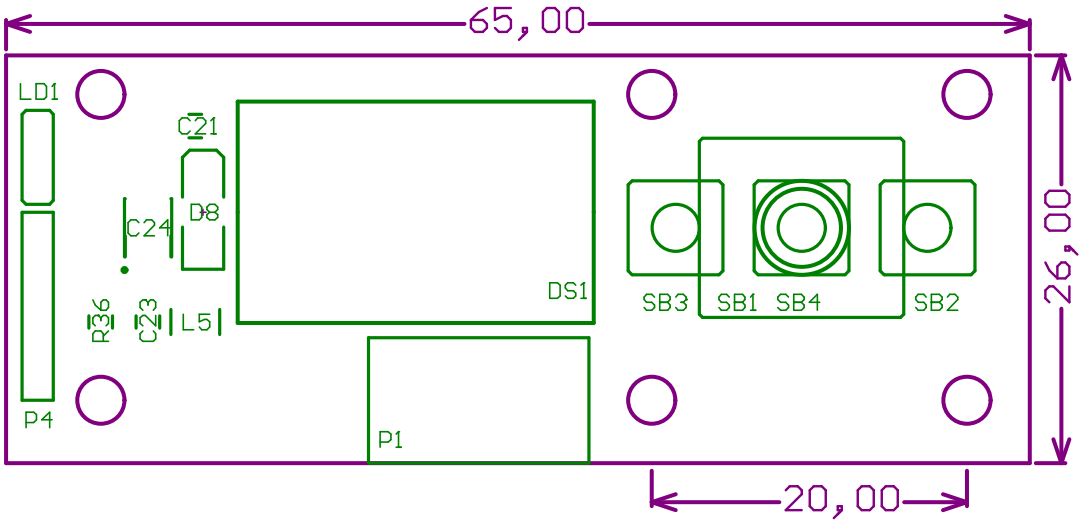
65,00
26,00
20,00
LD1
C21
D8
C24
R36
C23
L5
DS1
SB3
SB1
SB4
SB2
P4
P1

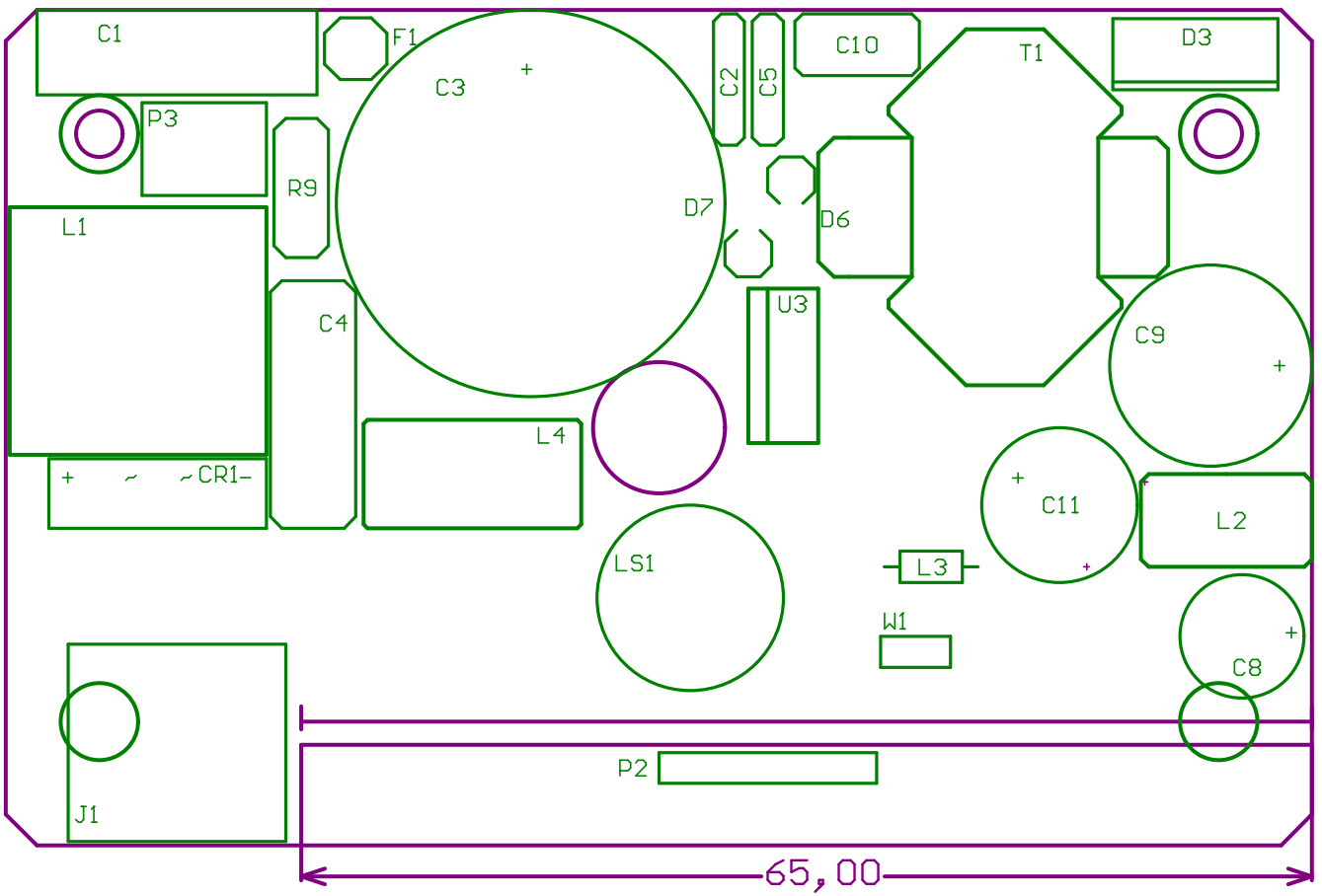
C1
F1
C3
C2
C5
C10
T1
D3
P3
R9
D7
D6
L1
U3
C4
C9
L4
CR1
C11
L2
LS1
L3
W1
C8
J1
P2
65,00