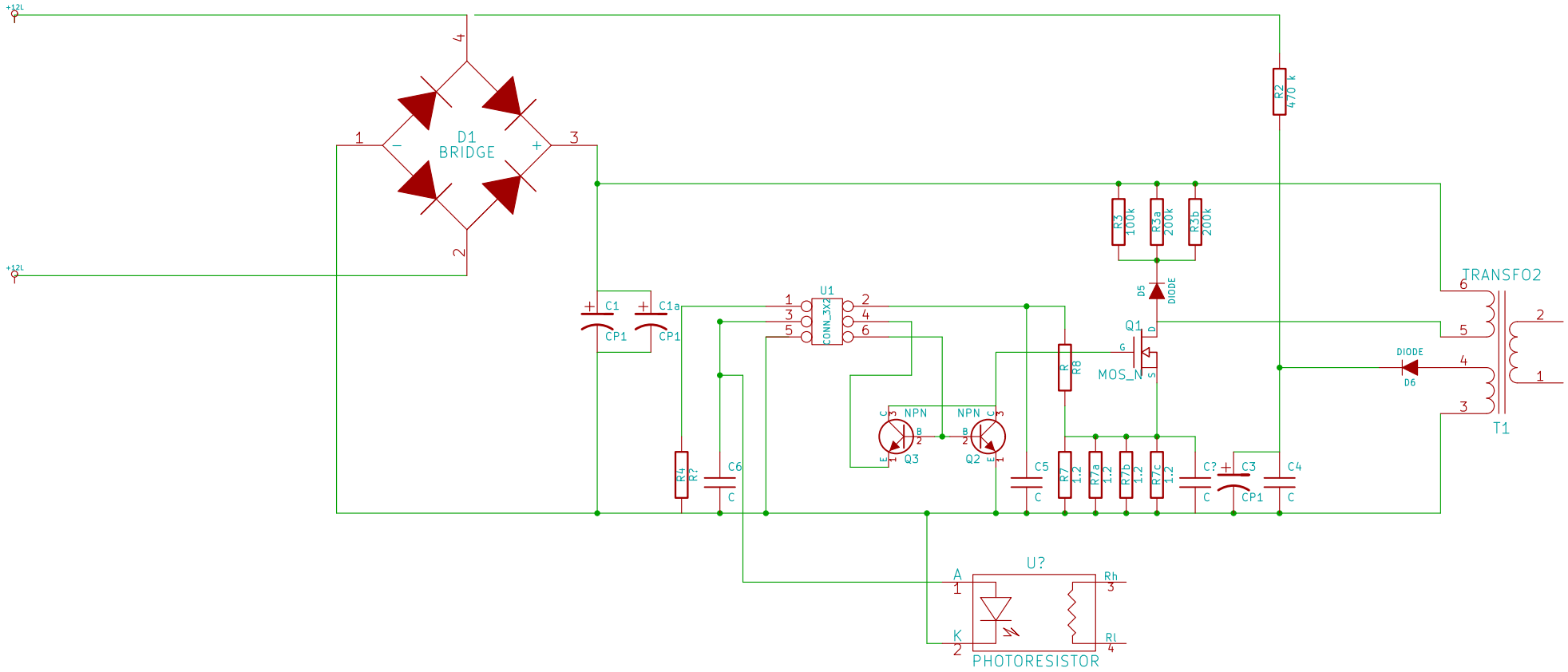

File: noname.sch		
Sheet: /		
Title:		
Size: A4	**Date: 31 dec 2012**	**Rev:**
KiCad E.D.A.		Id: 1/1