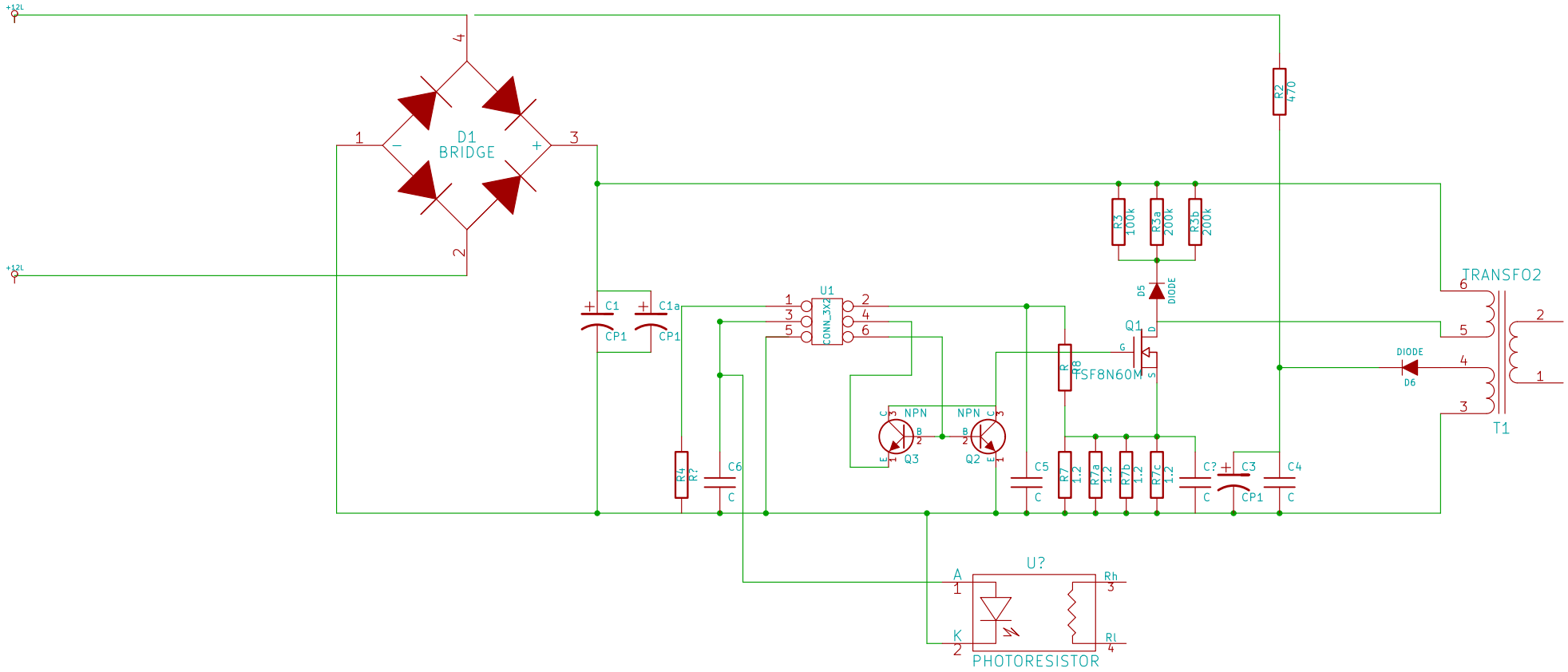


| | | |
|---|---|---|
| File: noname.sch | | |
| Sheet: / | | |
| **Title:** | | |
| Size: A4 | **Date: 31 dec 2012** | **Rev:** |
| KiCad E.D.A. | | Id: 1/1 |