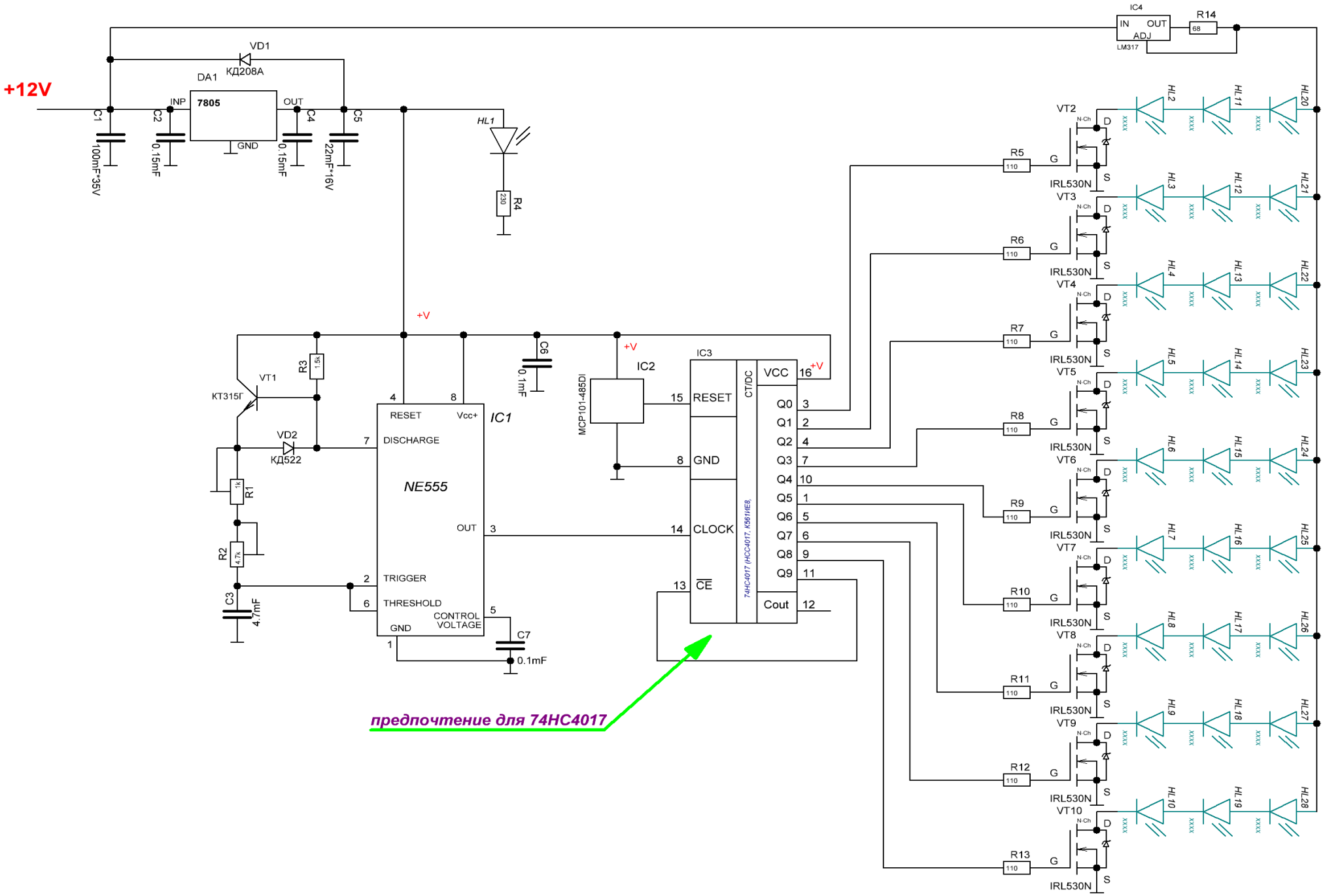
+12V
C1
100mF*35V
C2
0.15mF
DA1
7805
INP
OUT
GND
C4
0.15mF
C5
22mF*16V
VD1
КД208А
HL1
R4
220
IC4
IN
OUT
ADJ
LM317
R14
68
+V
C6
0.1mF
R3
1.5k
VT1
КТ315Г
VD2
КД522
R1
1k
R2
4.7k
C3
4.7mF
RESET
Vcc+
DISCHARGE
NE555
OUT
TRIGGER
THRESHOLD
CONTROL VOLTAGE
GND
IC1
C7
0.1mF
MCP101-485DI
IC2
IC3
RESET
GND
CLOCK
CE
CT/DC
VCC
Q0
Q1
Q2
Q3
Q4
Q5
Q6
Q7
Q8
Q9
Cout
74HC4017 (HCC4017, К561ИЕ8)
предпочтение для 74HC4017
R5
R6
R7
R8
R9
R10
R11
R12
R13
110
VT2
VT3
VT4
VT5
VT6
VT7
VT8
VT9
VT10
IRL530N
N-Ch
D
G
S
HL2
HL3
HL4
HL5
HL6
HL7
HL8
HL9
HL10
HL11
HL12
HL13
HL14
HL15
HL16
HL17
HL18
HL19
HL20
HL21
HL22
HL23
HL24
HL25
HL26
HL27
HL28