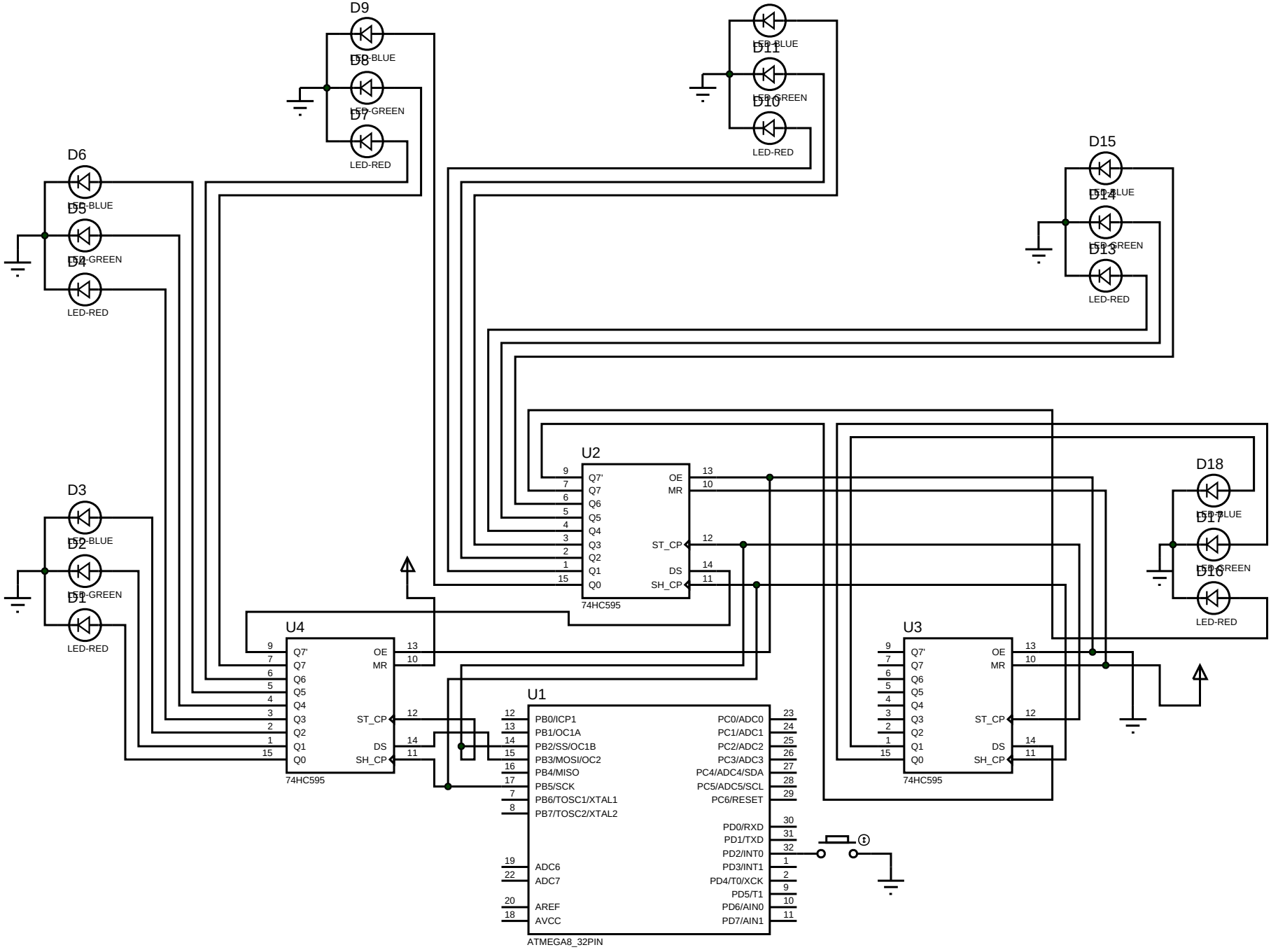
D9
D8
D7
LED-BLUE
LED-GREEN
LED-RED
D11
D10
LED-BLUE
LED-GREEN
LED-RED
D6
D5
D4
LED-BLUE
LED-GREEN
LED-RED
D15
D14
D13
LED-BLUE
LED-GREEN
LED-RED
U2
74HC595
Q7'
Q7
Q6
Q5
Q4
Q3
Q2
Q1
Q0
OE
MR
ST_CP
DS
SH_CP
D18
D17
D16
LED-BLUE
LED-GREEN
LED-RED
D3
D2
D1
LED-BLUE
LED-GREEN
LED-RED
U4
74HC595
U3
74HC595
U1
ATMEGA8_32PIN
PB0/ICP1
PB1/OC1A
PB2/SS/OC1B
PB3/MOSI/OC2
PB4/MISO
PB5/SCK
PB6/TOSC1/XTAL1
PB7/TOSC2/XTAL2
ADC6
ADC7
AREF
AVCC
PC0/ADC0
PC1/ADC1
PC2/ADC2
PC3/ADC3
PC4/ADC4/SDA
PC5/ADC5/SCL
PC6/RESET
PD0/RXD
PD1/TXD
PD2/INT0
PD3/INT1
PD4/T0/XCK
PD5/T1
PD6/AIN0
PD7/AIN1