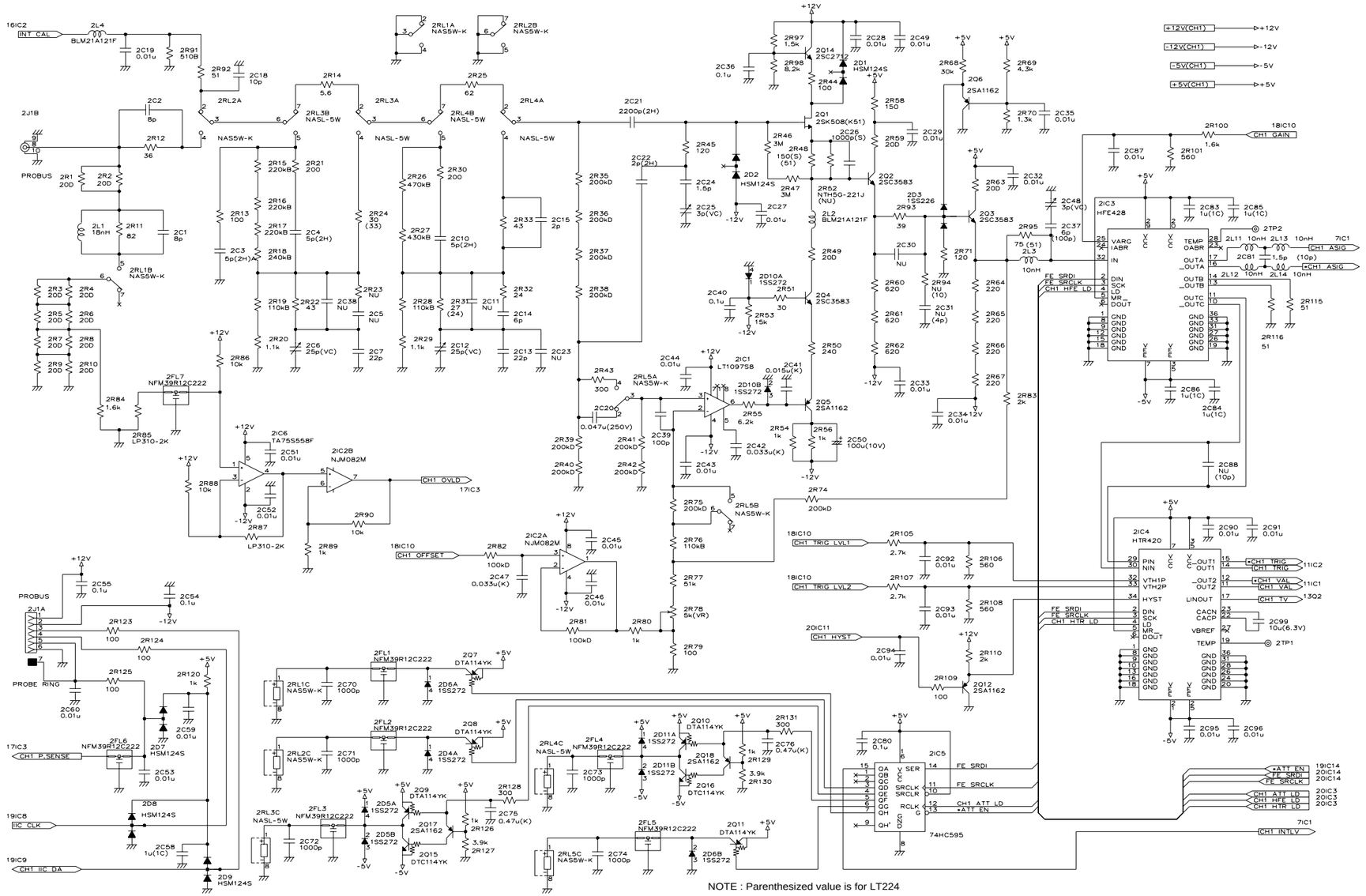

CH1 FRONT END (2)