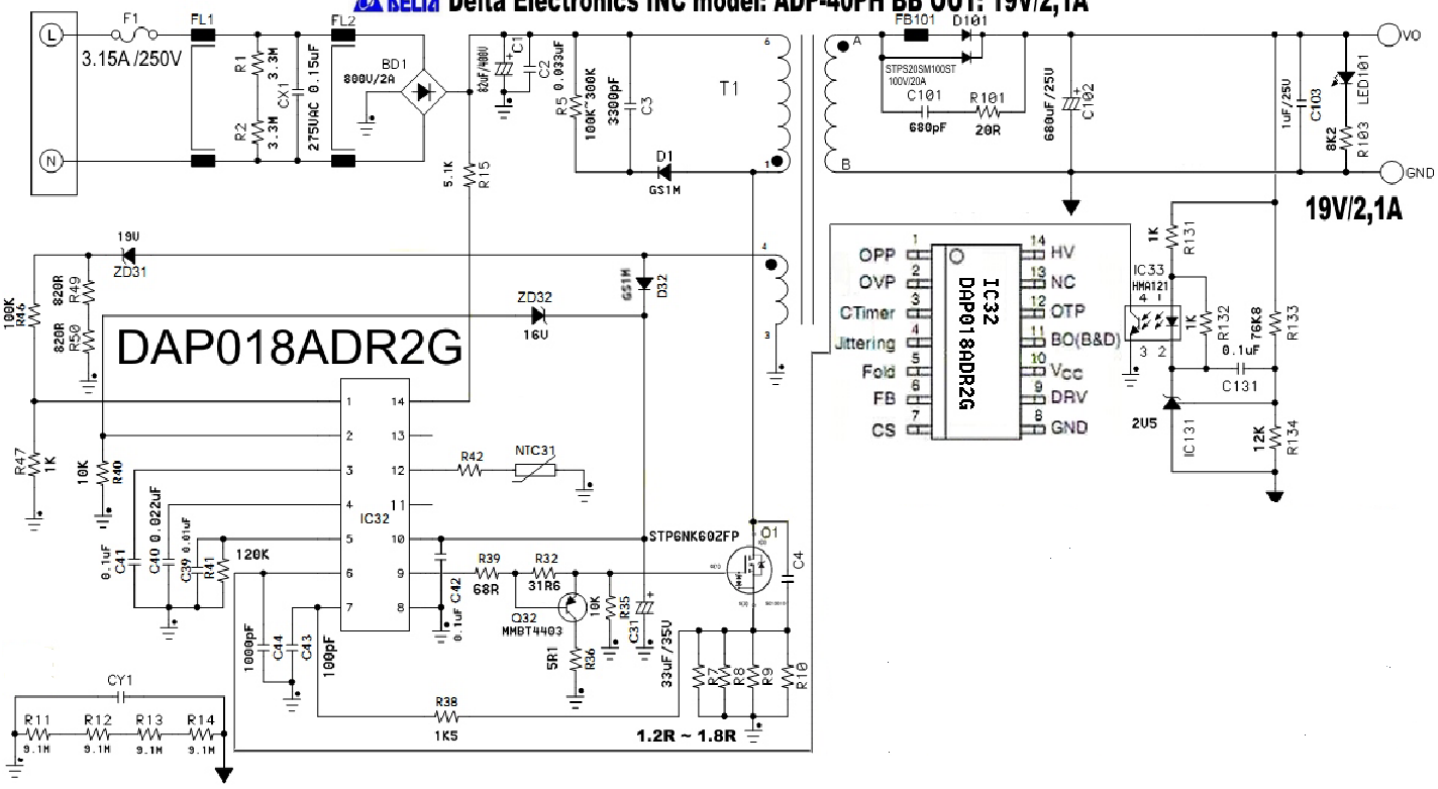Delta Electronics INC model: ADP-40PH BB OUT: 19V/2,1A