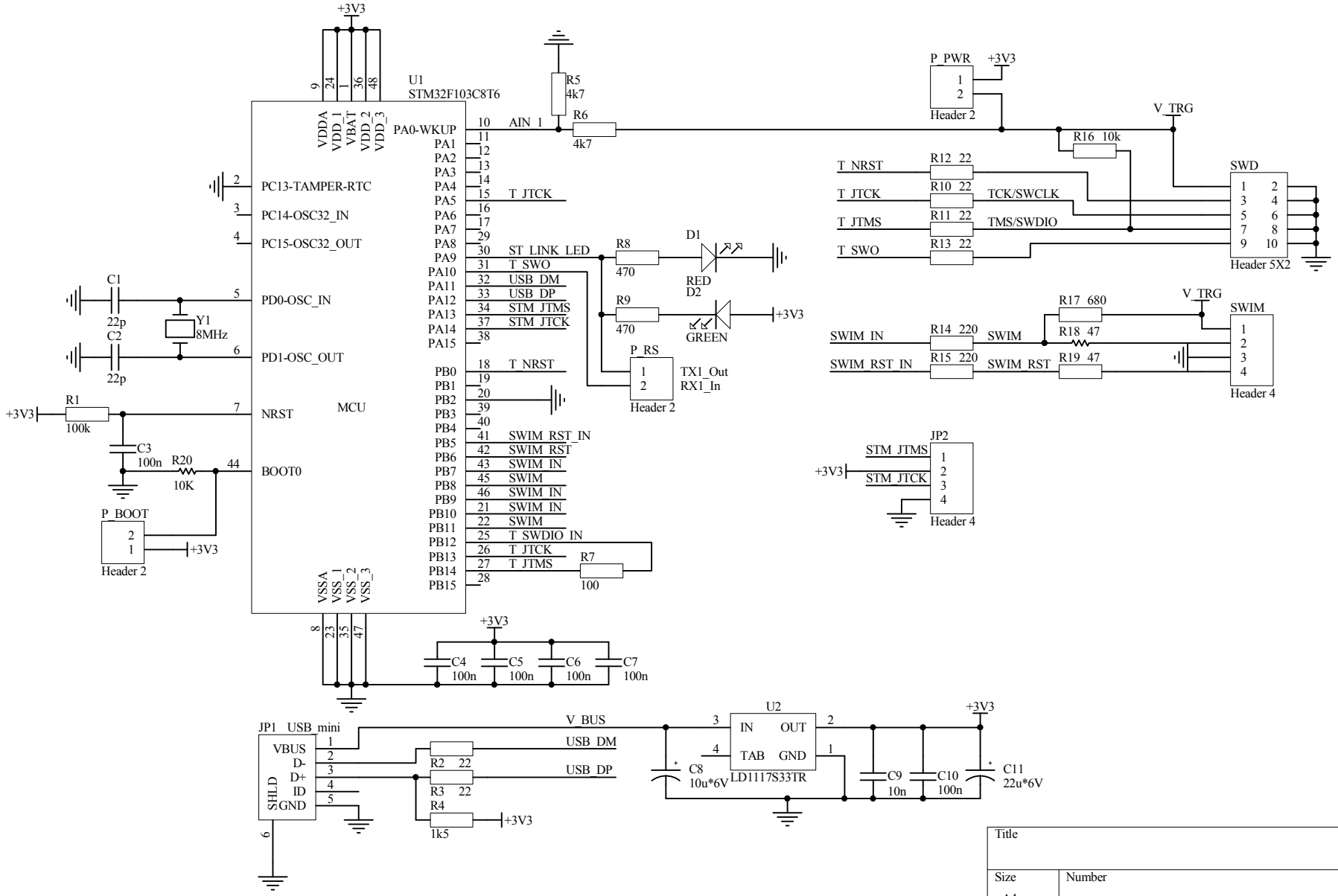


| Title | | |
|---|---|---|
| Size A4 | Number | Revision |
| Date: 25/07/2013 | | Sheet of |
| File: D:\Devel\..\swd_swim_v2.SchDoc | | Drawn By: |