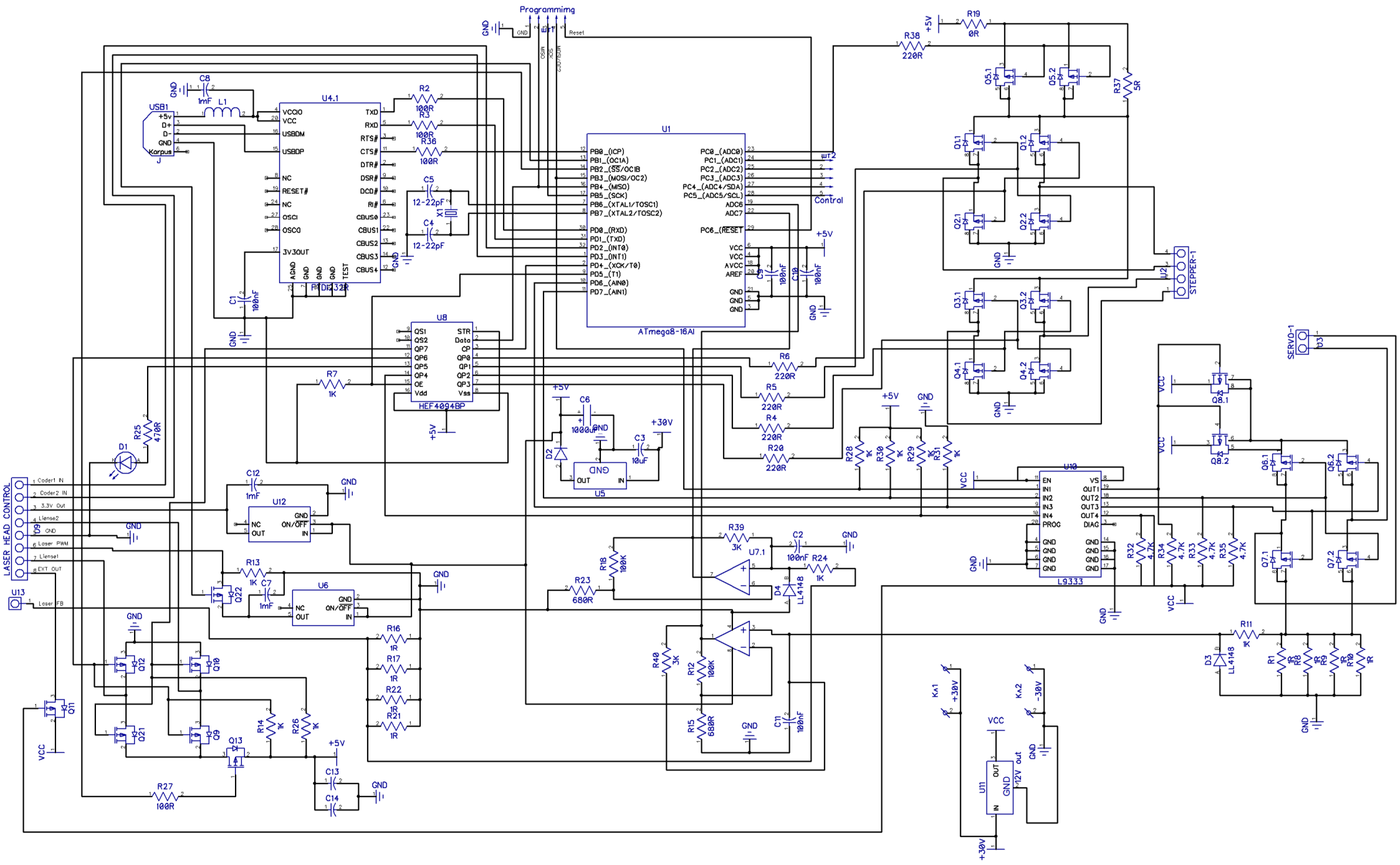
Programmimg
U1
ATmega8-16AI
U4.1
FT232R
U8
HEF4094BP
U10
L9333
U7.1
U5
U6
U12
U11
STEPPER-1
SERVO-1
LASER HEAD CONTROL
Coder1 IN
Coder2 IN
3.3V Out
Lense2
GND
Laser PWM
Lense1
EXT OUT
Laser FB
USB1
Control
Reset
MISO
SCK
MOSI/RESET
Ka1
Ka2
+30V
-30V
12V out