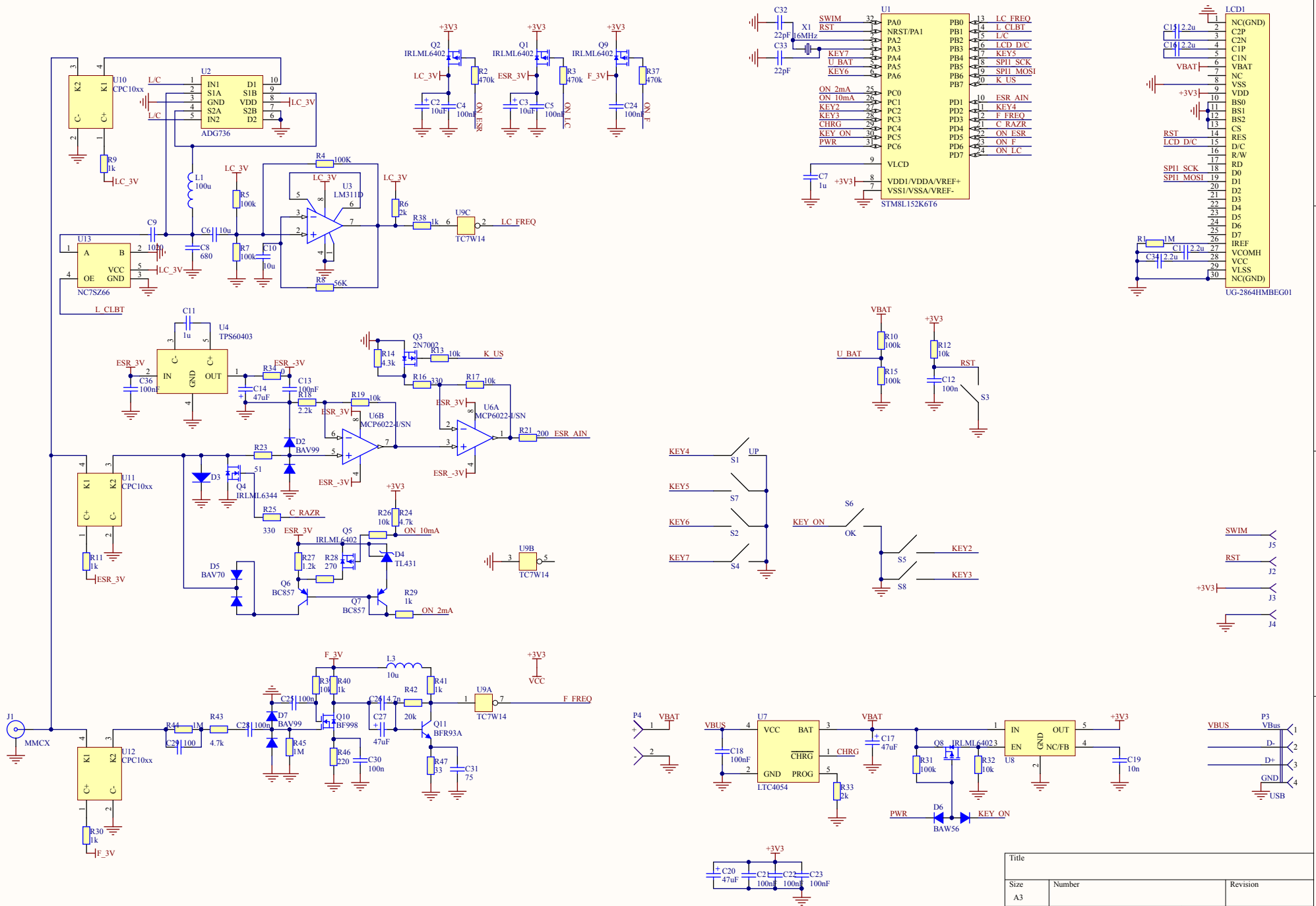
U10 CPC10xx
U2 ADG736
IN1 S1A GND S2A IN2 D1 S1B VDD S2B D2
L/C
LC_3V
R9 1k
L1 100u
R4 100K
R5 100k
R6 2k
R7 100k
R8 56K
C6 10u
C8 680
C9 1000
C10 10u
U3 LM311D
U9C TC7W14
LC_FREQ
U13 NC7SZ66
A B VCC OE GND
L_CLBT
Q2 IRLML6402
Q1 IRLML6402
Q9 IRLML6402
+3V3
ESR_3V
F_3V
R2 470k
R3 470k
R37 470k
C2 10uF
C3 10uF
C4 100nF
C5 100nF
C24 100nF
ESR_ON
CLC_ON
F_ON
U1 STM8L152K6T6
PA0 NRST/PA1 PA2 PA3 PA4 PA5 PA6 PC0 PC1 PC2 PC3 PC4 PC5 PC6 VLCD VDD1/VDDA/VREF+ VSS1/VSSA/VREF-
PB0 PB1 PB2 PB3 PB4 PB5 PB6 PB7 PD1 PD2 PD3 PD4 PD5 PD6 PD7
SWIM RST KEY7 U_BAT KEY6 ON_2mA ON_10mA KEY2 KEY3 CHRG KEY_ON PWR
LC_FREQ L_CLBT L/C LCD_D/C KEY5 SPI1_SCK SPI1_MOSI K_US ESR_AIN KEY4 F_FREQ C_RAZR ON_ESR ON_F ON_LC
X1 16MHz
C32 22pF
C33 22pF
C7 1u
LCD1 UG-2864HMBEG01
NC(GND) C2P C2N C1P C1N VBAT NC VSS VDD BS0 BS1 BS2 CS RES D/C R/W RD D0 D1 D2 D3 D4 D5 D6 D7 IREF VCOMH VCC VLSS NC(GND)
C15 2.2u
C16 2.2u
C1 2.2u
C34 2.2u
R1 1M
U4 TPS60403
IN GND OUT
C11 1u
C36 100nF
C14 47uF
C13 100nF
R34 0
R18 2.2k
R19 10k
R14 4.3k
R13 10k
R16 330
R17 10k
Q3 2N7002
U6B MCP6022-I/SN
U6A MCP6022-I/SN
R21 200
R23 51
D2 BAV99
D3
Q4 IRLML6344
U11 CPC10xx
R11 1k
R25 330
C_RAZR
R26 10k
R24 4.7k
ON_10mA
Q5 IRLML6402
R27 1.2k
R28 270
D4 TL431
Q6 BC857
Q7 BC857
R29 1k
ON_2mA
D5 BAV70
U9B TC7W14
VBAT
U_BAT
R10 100k
R15 100k
R12 10k
C12 100n
RST
S3
KEY4 KEY5 KEY6 KEY7
S1 S7 S2 S4
UP
KEY_ON
S6 OK
S5 S8
KEY2 KEY3
SWIM RST +3V3
J5 J2 J3 J4
J1 MMCX
U12 CPC10xx
R30 1k
R44 1M
C29 100
R43 4.7k
C28 100n
D7 BAV99
R45 1M
C25 100n
R3 10k
R40 1k
L3 10u
R41 1k
R42 20k
C26 4.7n
C27 47uF
Q10 BF998
R46 220
C30 100n
Q11 BFR93A
R47 33
C31 75
U9A TC7W14
VCC
F_FREQ
P4 VBAT
VBUS
U7 LTC4054
VCC BAT CHRG GND PROG
C18 100nF
R33 2k
C17 47uF
Q8 IRLML6402
R31 100k
R32 10k
U8
IN EN OUT NC/FB GND
C19 10n
PWR
D6 BAW56
KEY_ON
P3 USB
VBus D- D+ GND
C20 47uF
C21 100nF
C22 100nF
C23 100nF
Title
Size A3
Number
Revision
Date: 28.02.2014
Sheet of
File: I:\Altium\..\LCMeter3.SchDoc
Drawn By: