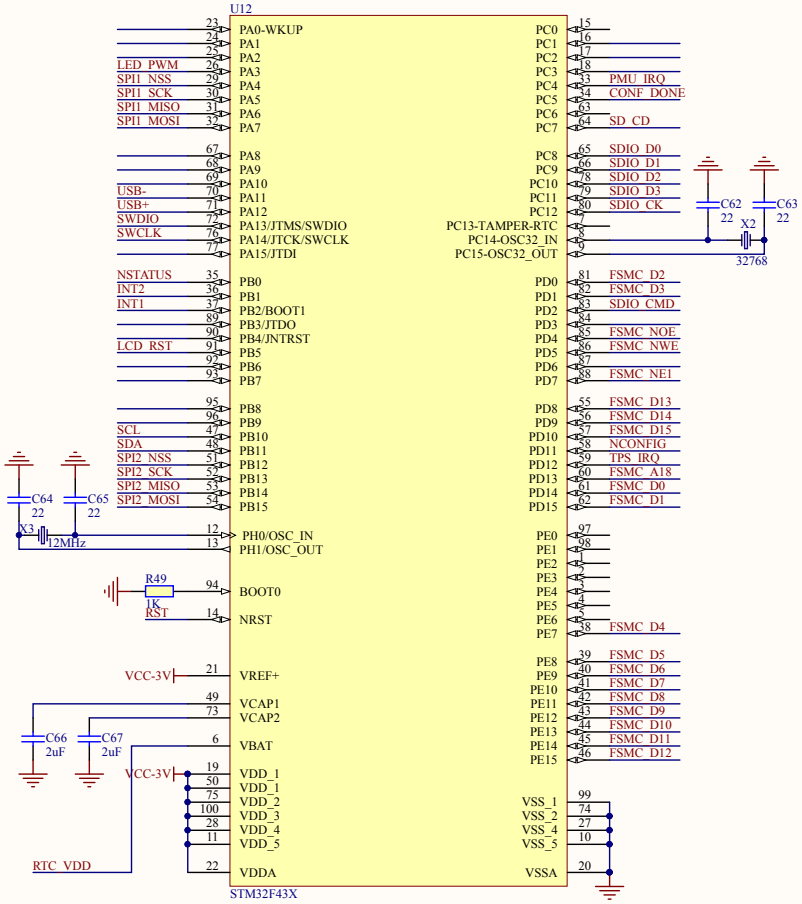

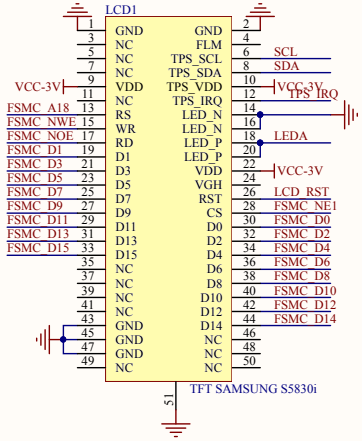

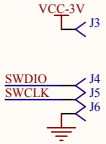

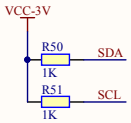

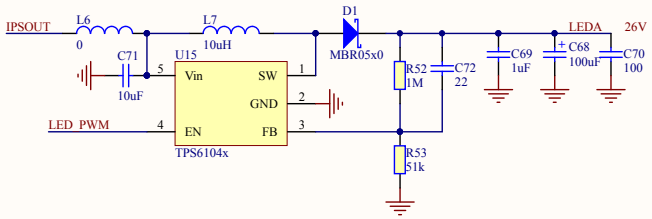

Title		
Size A3	Number	Revision
Date: 02.05.2014		Sheet of
File: G:\Altium\Projects\Osc\OSC .SchDoc		Drawn By: