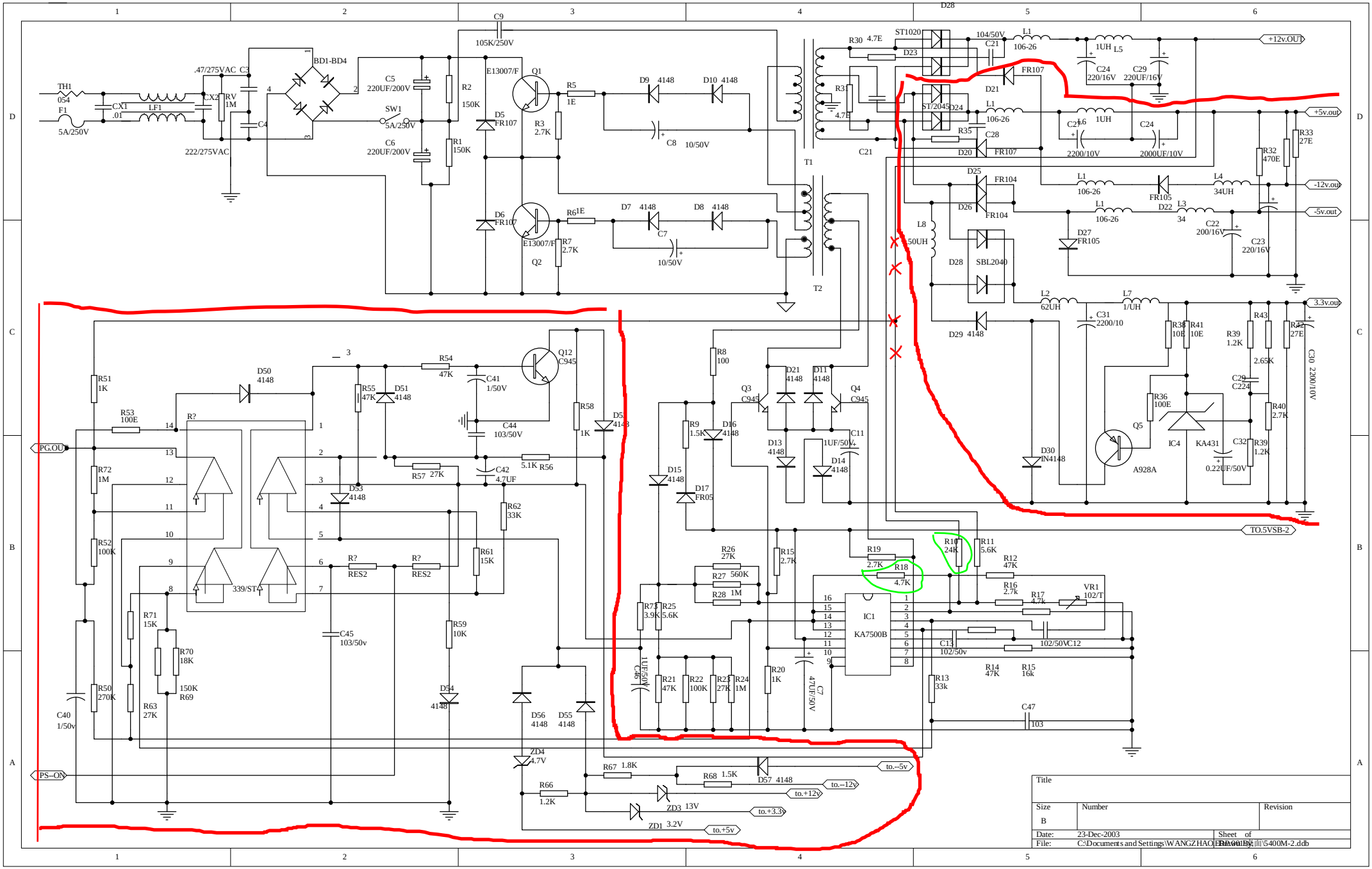
TH1
054
F1
5A/250V
CX1
.01
LF1
CX2
RV
1M
.47/275VAC
C3
C4
222/275VAC
BD1-BD4
C5
220UF/200V
C6
220UF/200V
SW1
5A/250V
R2
150K
R1
150K
C9
105K/250V
E13007/F
Q1
Q2
D5
FR107
D6
FR107
R5
1E
R6
1E
R3
2.7K
R7
2.7K
D9 4148
D10 4148
D7 4148
D8 4148
C8 10/50V
C7
10/50V
T1
T2
R30 4.7E
R31
4.7E
ST1020
ST2045
D23
D24
D21
FR107
C21
104/50V
L1
106-26
L5
1UH
C24
220/16V
C29
220UF/16V
+12v.OUT
+5v.out
C26
2200/10V
C24
2000UF/10V
R35
C28
D20
FR107
R32
470E
R33
27E
D25
FR104
D26
FR104
L4
34UH
FR105
D22
L3
34
-12v.out
-5v.out
C22
200/16V
C23
220/16V
D27
FR105
L8
50UH
D28
SBL2040
D29 4148
L2
62UH
L7
1/UH
3.3v.out
C31
2200/10
R38
10E
R41
10E
R39
1.2K
R43
2.65K
R42
27E
C30 2200/10V
C29
C224
R36
100E
R40
2.7K
Q5
A928A
IC4
KA431
C32
0.22UF/50V
R39
1.2K
D30
IN4148
TO.5VSB-2
R51
1K
R53
100E
R72
1M
R52
100K
PG.OUT
R?
339/ST
D50
4148
R54
47K
R55
47K
D51
4148
C41
1/50V
Q12
C945
R58
1K
D52
C44
103/50V
R57 27K
C42
4.7UF
5.1K R56
D53
4148
R62
33K
R61
15K
R?
RES2
R?
RES2
R71
15K
R70
18K
150K
R69
R63
27K
R50
270K
C40
1/50v
C45
103/50v
R59
10K
D54
4148
D56
4148
D55
4148
ZD4
4.7V
PS-ON
R8
100
R9
1.5K
D16
4148
D15
4148
D17
FR05
Q3
C945
Q4
C945
D21
4148
D11
4148
D13
4148
D14
4148
C11
1UF/50V
R26
27K
R27 560K
R28 1M
R73
3.9K
R25
5.6K
C46
1UF/50V
R21
47K
R22
100K
R23
27K
R24
1M
R20
1K
R15
2.7K
R19
2.7K
R18
4.7K
R10
24K
R11
5.6K
R12
47K
R16
2.7k
R17
4.7k
VR1
102/T
IC1
KA7500B
C13
102/50v
102/50V C12
R14
47K
R15
16k
R13
33k
C7
47UF/50V
C47
103
R67 1.8K
R68 1.5K
D57 4148
R66
1.2K
ZD3 13V
ZD1 3.2V
to.-5v
to.-12v
to.+12v
to.+3.3v
to.+5v
Title
Size
B
Number
Revision
Date: 23-Dec-2003
Sheet of
File: C:\Documents and Settings\WANGZHAOLIANG\桌面\5400M-2.ddb
Drawn by:

Te

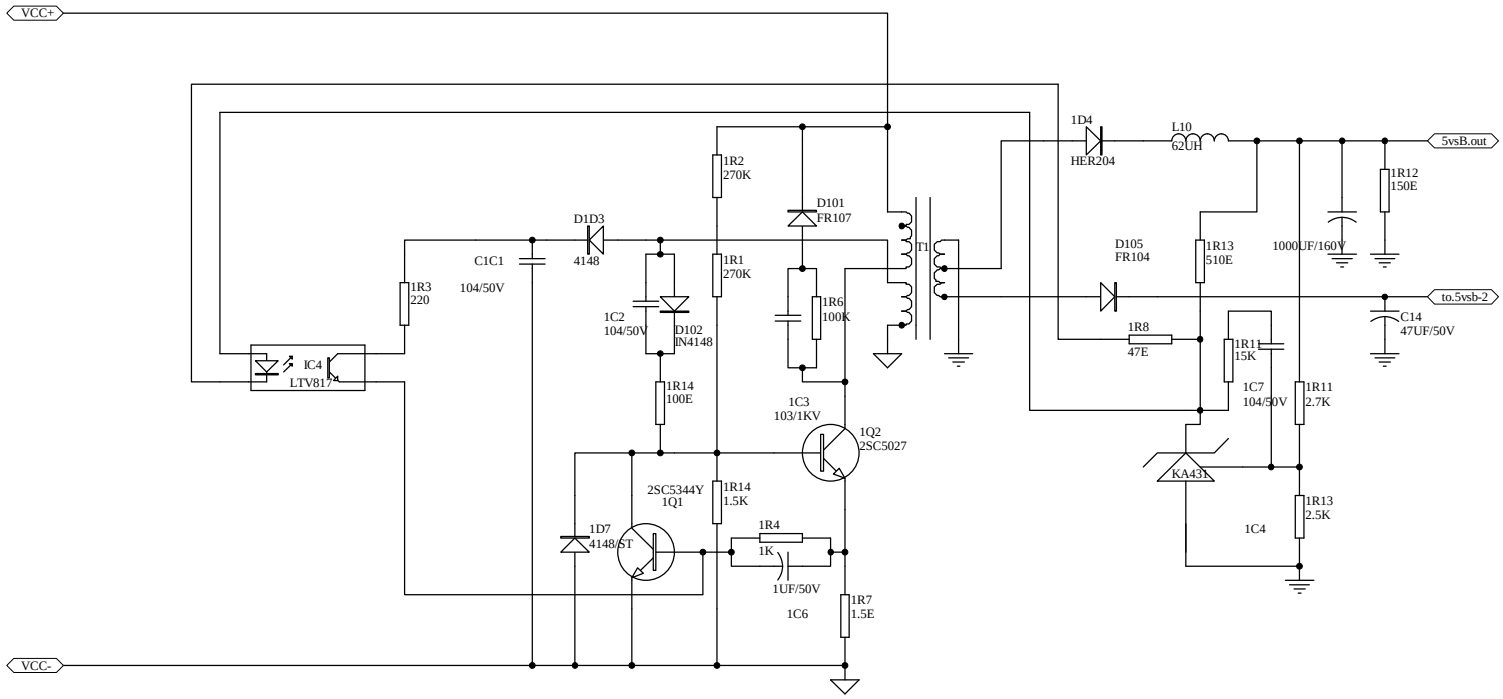


| Title | | |
|---|---|---|
| Size B | Number | Revision |
| Date: 23-Dec-2003 | Sheet of | |
| File: C:\Documents and Settings\WANGZHAOJIE\桌面\5400M-1.DDB | Drawn By: | |