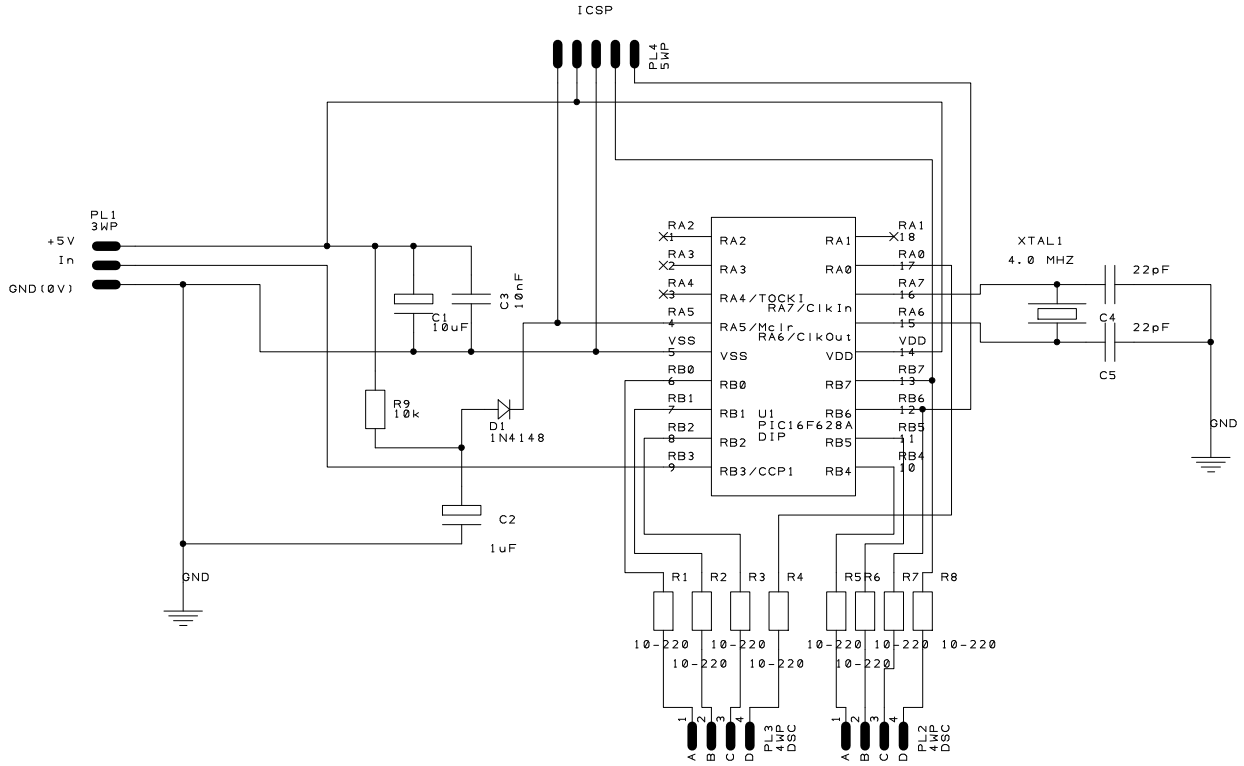
ICSP
PL4
5WP
PL1
3WP
+5V
In
GND(0V)
C1
10uF
C3
10nF
R9
10k
D1
1N4148
C2
1uF
GND
RA2
RA3
RA4
RA5
VSS
RB0
RB1
RB2
RB3
RA2
RA3
RA4/TOCKI
RA5/Mclr
VSS
RB0
RB1
RB2
RB3/CCP1
U1
PIC16F628A
DIP
RA1
RA0
RA7/ClkIn
RA6/ClkOut
VDD
RB7
RB6
RB5
RB4
RA1
RA0
RA7
RA6
VDD
RB7
RB6
RB5
RB4
XTAL1
4.0 MHZ
22pF
C4
22pF
C5
GND
R1
R2
R3
R4
R5
R6
R7
R8
10-220
10-220
10-220
10-220
10-220
10-220
10-220
10-220
PL3
4WP
DSC
PL2
4WP
DSC
A
B
C
D