Generated by Foxit PDF Creator © Foxit Software
http://www.foxitsoftware.com For evaluation only.

http://pdt.static.globalsources.com.cn/IMAGES/PDT/SPEC/021/K5013221021.pdf

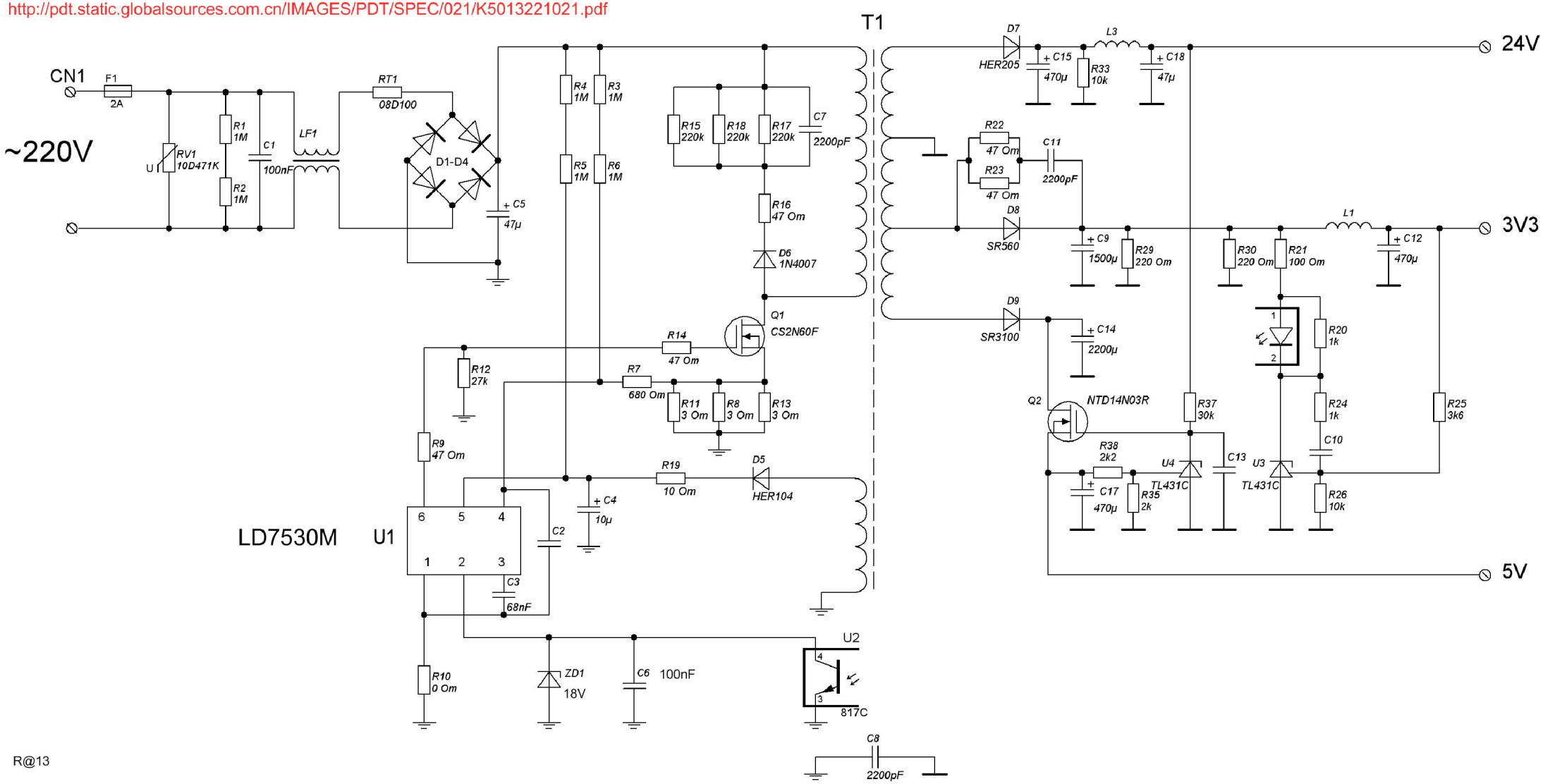

R@13