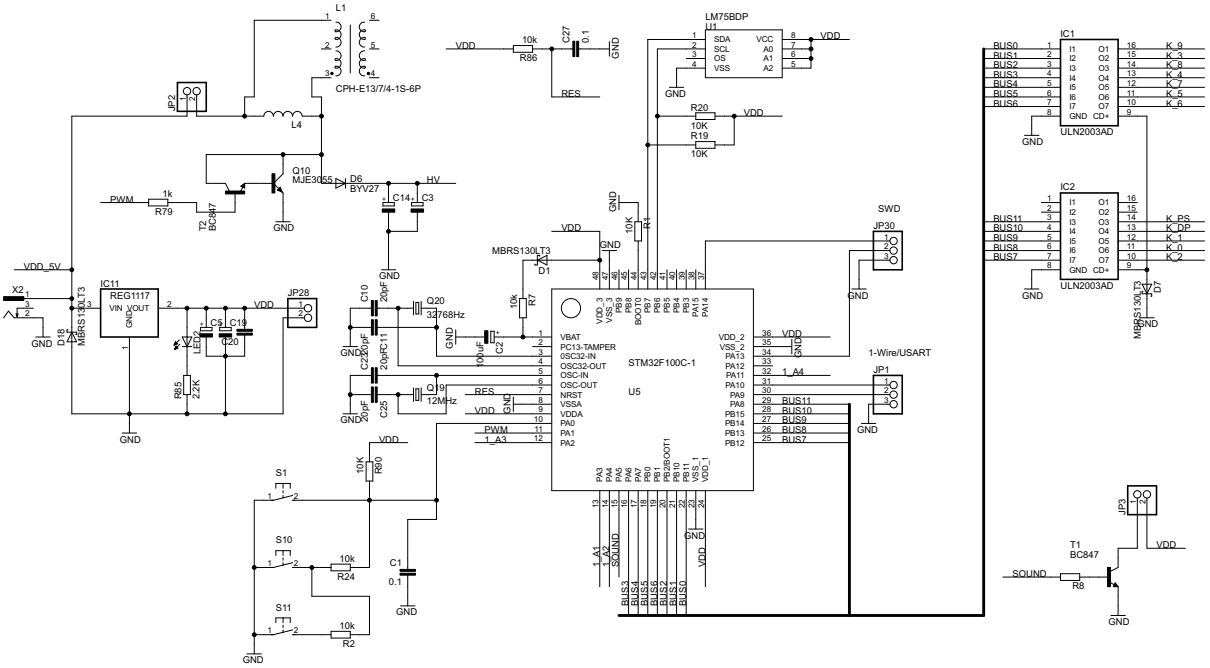
L1
CPH-E13/7/4-1S-6P
L4
JP2
Q10
MJE3055
D6
BYV27
HV
PWM
1k
R79
T2
BC847
C14
C3
VDD_5V
X2
IC11
REG1117
VIN VOUT
GND
D18
MBRS130LT3
LED2
C5
C19
C20
R85
2.2K
JP28
VDD
C10
20pF
Q20
32768Hz
C22
20pF
C11
20pF
Q19
12MHz
C25
20pF
10uF
C2
MBRS130LT3
D1
10k
R7
RES
PWM
1_A3
VDD
10K
R90
S1
S10
10k
R24
S11
10k
R2
C1
0.1
VDD
10k
R86
C27
0.1
RES
LM75BDP
U1
SDA
SCL
OS
VSS
VCC
A0
A1
A2
R20
10K
R19
10K
10K
R44
SWD
JP30
STM32F100C-1
U5
VBAT
PC13-TAMPER
OSC32-IN
OSC32-OUT
OSC-IN
OSC-OUT
NRST
VSSA
VDDA
PA0
PA1
PA2
VDD_2
VSS_2
PA13
PA12
PA11
PA10
PA9
PA8
PB15
PB14
PB13
PB12
1_A4
BUS11
BUS10
BUS9
BUS8
BUS7
1-Wire/USART
JP1
1_A1
1_A2
SOUND
BUS3
BUS4
BUS5
BUS6
BUS2
BUS1
BUS0
IC1
ULN2003AD
BUS0
BUS1
BUS2
BUS3
BUS4
BUS5
BUS6
K_9
K_3
K_8
K_4
K_7
K_5
K_6
IC2
ULN2003AD
BUS11
BUS10
BUS9
BUS8
BUS7
K_PS
K_DP
K_1
K_0
K_2
MBRS130LT3
D7
JP3
T1
BC847
SOUND
R8

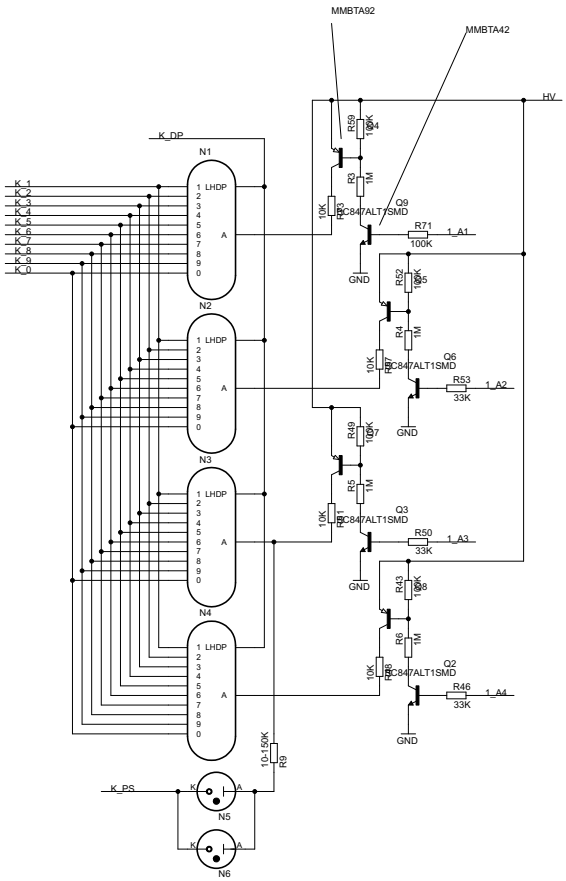
MMBTA92
MMBTA42
HV
K_DP
K_1
K_2
K_3
K_4
K_5
K_6
K_7
K_8
K_9
K_0
N1
N2
N3
N4
LHDP
A
R59
100K
R54
R3
1M
10K
R63
Q9
BC847ALT1SMD
R71
100K
1_A1
R52
100K
R55
R4
1M
10K
R57
Q6
BC847ALT1SMD
R53
33K
1_A2
R49
100K
R47
R5
1M
10K
R51
Q3
BC847ALT1SMD
R50
33K
1_A3
R43
100K
R48
R6
1M
10K
R46
Q2
BC847ALT1SMD
R46
33K
1_A4
10-150K
R9
K_PS
N5
N6