## ■ NX-SW150 SCHEMATIC DIAGRAM (MAIN)

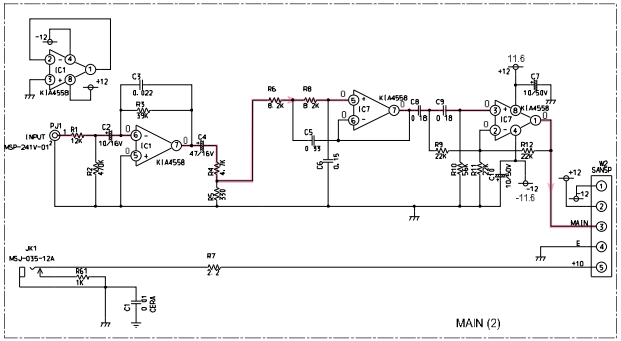


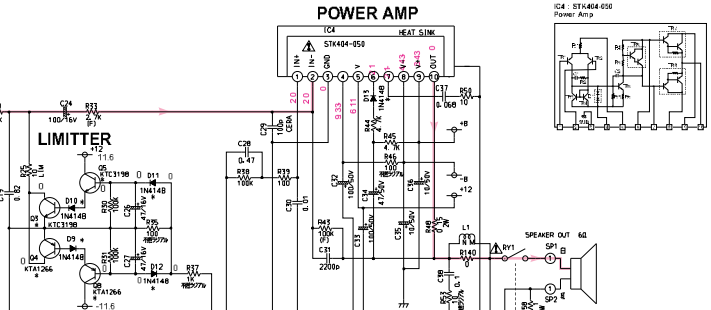


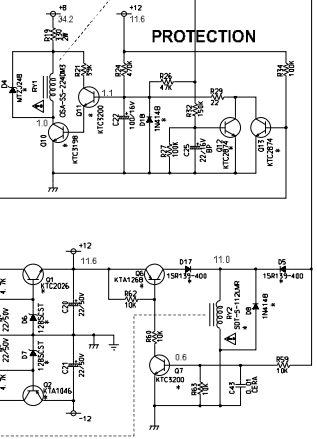


| MODEL NAME | DEST. | T1 | F2 (S2) | F1 (S1) | AC CORD | SW1 (S4) |
|---|---|---|---|---|---|---|
| A1E4A0 | J | 356184 | 2.5A125V | | 405589 | |
| A1E4B0 | U/C | 356186 | 2.5A250V | | 353587 | |
| A1E4C0 | R | 356187 | 2.5A250V | T500mA250V | 394981 | 084733 |
| A1E4D0 | A | 356188 | T500mA250V | | 393807 | |
| A1E4E0 | B | 356189 | T500mA250V | | 389588 | |
| A1E4F0 | G | 356189 | T500mA250V | | 355106 | |
| A1E4L0 | K | 356187 | 2.5A250V | T500mA250V | 357511 | 084733 |
| A1E4M0 | T | 356187 | 2.5A250V | T500mA250V | 356521 | 084733 |
| A1E4N0 | L | 356187 | 2.5A250V | T500mA250V | 355106 | 084733 |

A1E4A0/JPN (402065)
A1E4B0/USA/CAN (402067)
A1E4C0/TPE (402068)
A1E4D0/OCEN (402069)
A1E4E0/GBR (402070)
A1E4F0/EURO (402071)
A1E4L0/KOR (402072)
A1E4M0/CHN (402073)
A1E4N0/SIN (402074)

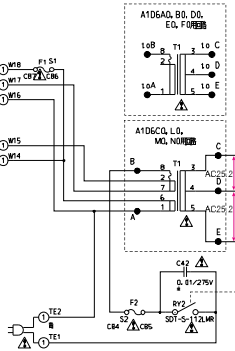


### Interchangeable Parts

| Ref. No. | Parts Name | Dest. |
|---|---|---|
| Q8, Q9, Q10 | 2SC1815<br>KTC3198<br>BC546 | ALL |
| Q4, Q6 | 2SA1015<br>KTA1266<br>BC556 | ALL |
| Q1 | 2SD1621<br>KTC2026 | ALL |
| Q2 | 2SB1422<br>KTA1046 | ALL |
| Q7, Q11 | 2SC2240<br>KTC3200 | ALL |
| Q5 | 2SB910<br>KTA1268 | ALL |
| Q12, Q13 | 2SC2878<br>2SC3792<br>KTC2874 | ALL |
| D8, D9, D16, D11, D12, D13, D14, D15, D18 | 1N4148<br>1SS133 | ALL |
| D3 | RBV-402 | ALL |
| D6, D7 | D15SB20<br>MJ2012CT<br>1265CT | ALL |
| D4 | MJ2248<br>2485BCT | ALL |
| RY2 | SDT-S-112LMR<br>SDT-S-112LM<br>SDT-S-112LMR | J/A/U/C/B/G<br>R/T/K/L |
| C49 | GA-S 10 V 6 010UF/275V P=10<br>R40K121005001M<br>R40K121000001M | ALL |
| AC CORD | 353587<br>050186<br>394981<br>355106<br>389588<br>357511<br>391086 | U/C<br>B<br>G<br>K |

NOTICE (model)
(J)····· JAPAN
(U)····· U. S. A
(C)····· CANADA
(R)····· GENERAL
(T)····· CHINA
(K)····· KOREA
(A)····· AUSTRALIA
(B)····· BRITISH
(G)····· EUROPE
(L)····· SINGAPORE
(E)····· SOUTH EUROPE

* All voltages are measured with a 10MΩ/V DC electronic volt meter.
* Components having special characteristics are marked ⚠ and must be replaced with parts having specifications equal to those originally installed.
* Schematic diagram is subject to change without notice.

IC1, 2, 7 : KIA4558P
Dual OP Amp