| RevNo | Revision note | Date | Signature | Checked |
|---|---|---|---|---|

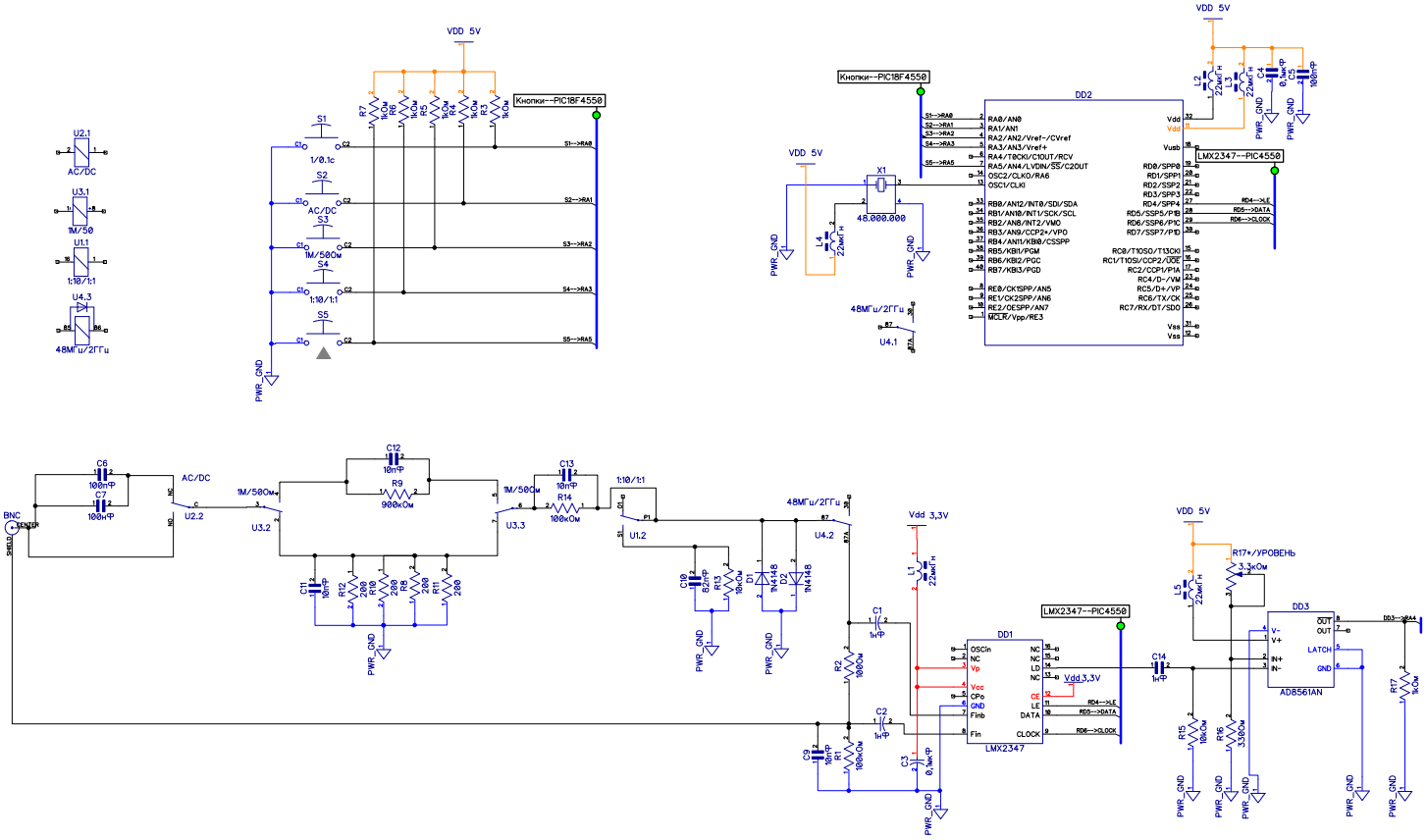


| Itemref | Quantity | Title/Name, designation, material, dimension etc | | Article No./Reference | |
|---|---|---|---|---|---|
| Designed by | Checked by | Approved by - date - 00/00/00 | File name | Date 00/00/00 | Scale 1:1 |
| | | | | Edition 0 | Sheet 1/1 |