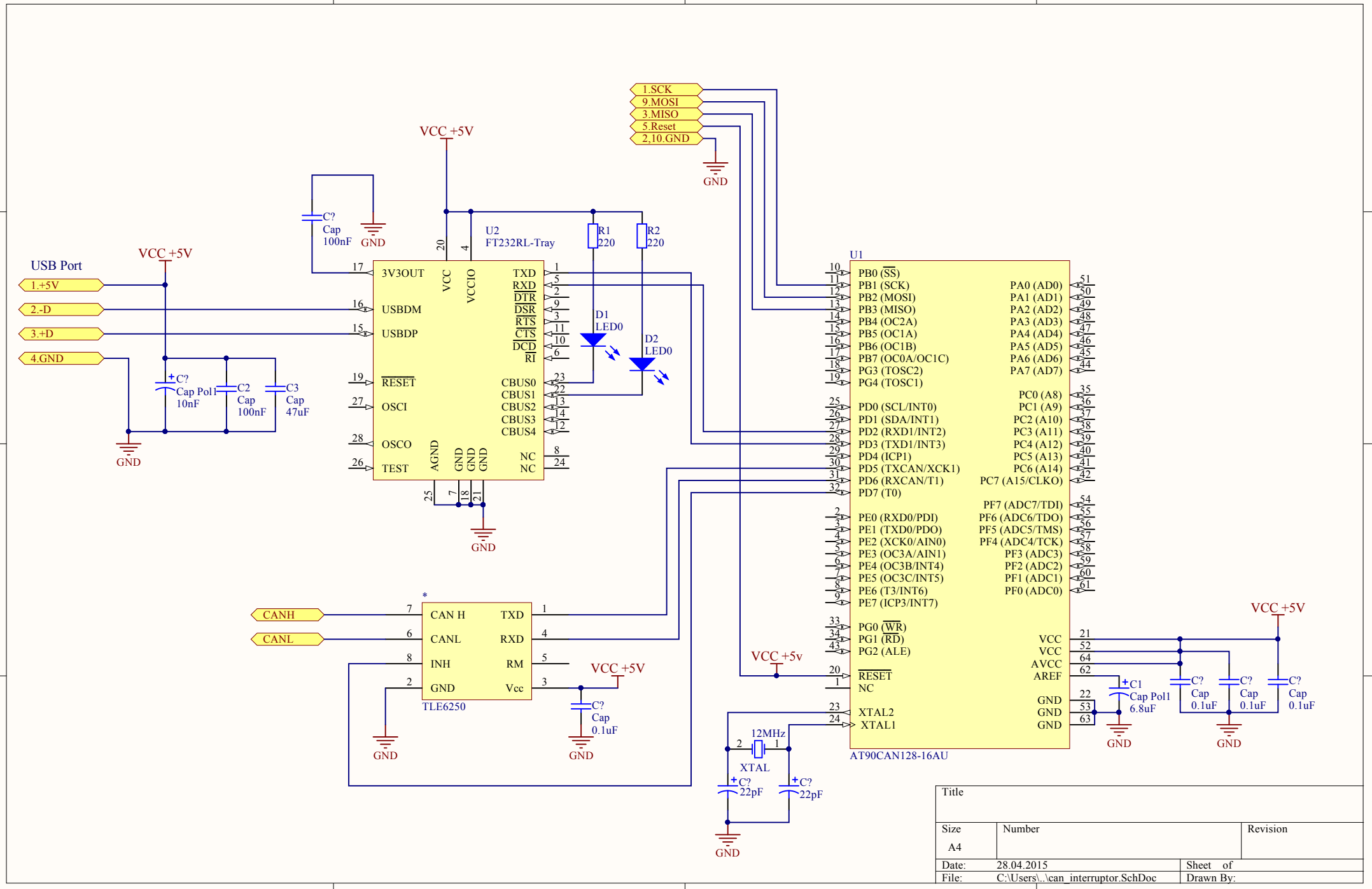

Title		
Size A4	Number	Revision
Date: 28.04.2015		Sheet of
File: C:\Users\..\can_interruptor.SchDoc		Drawn By: