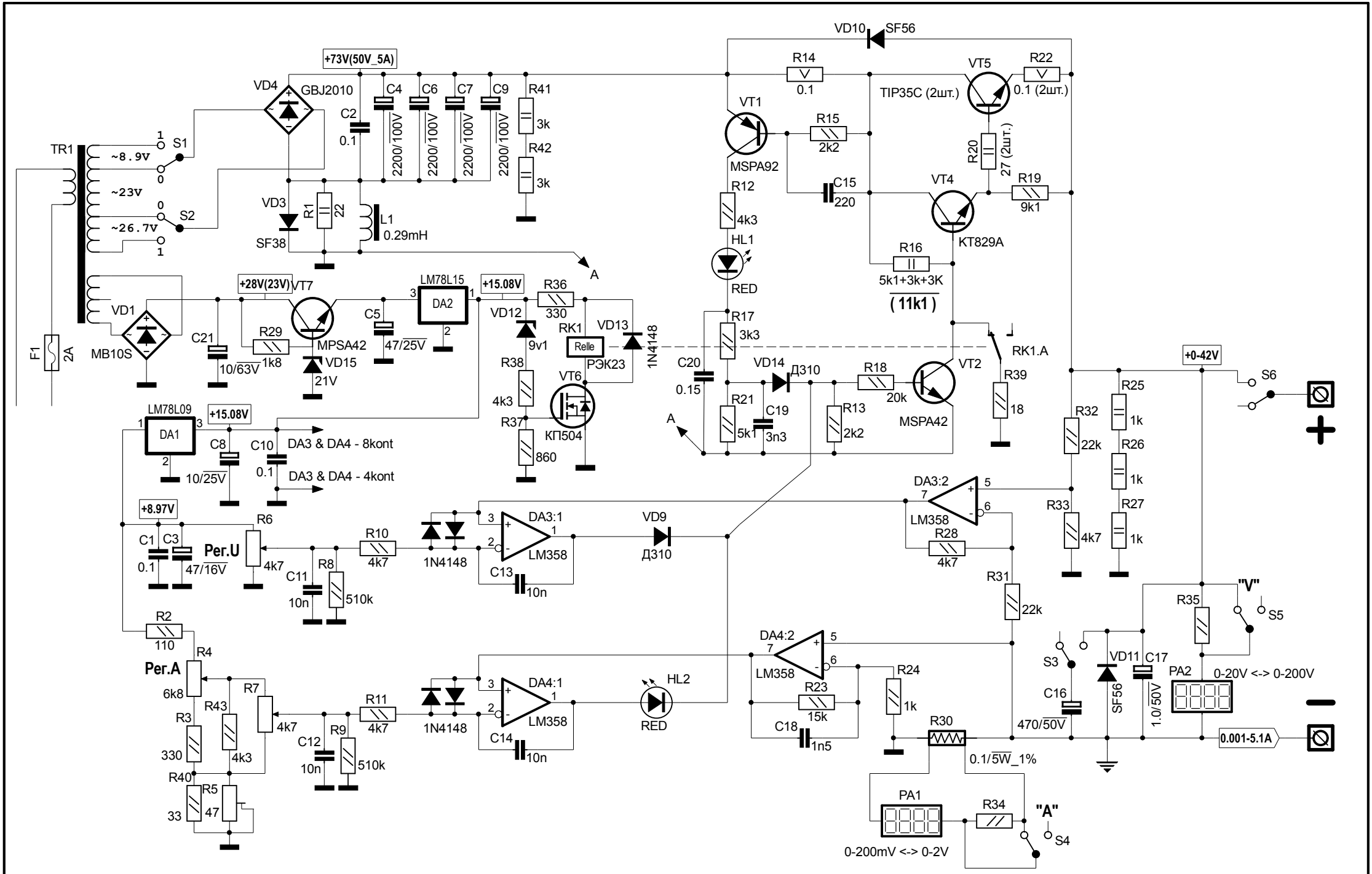

Title:	***INSTRUMENT POWER SUPPLY***
Size: A4	Author: ***Валерий Лабинский (harmless)***
Date: ***02.2015***	Drawn by: ***В. Лабинский***
Filename:	***# Instrument power supply_5.sch***