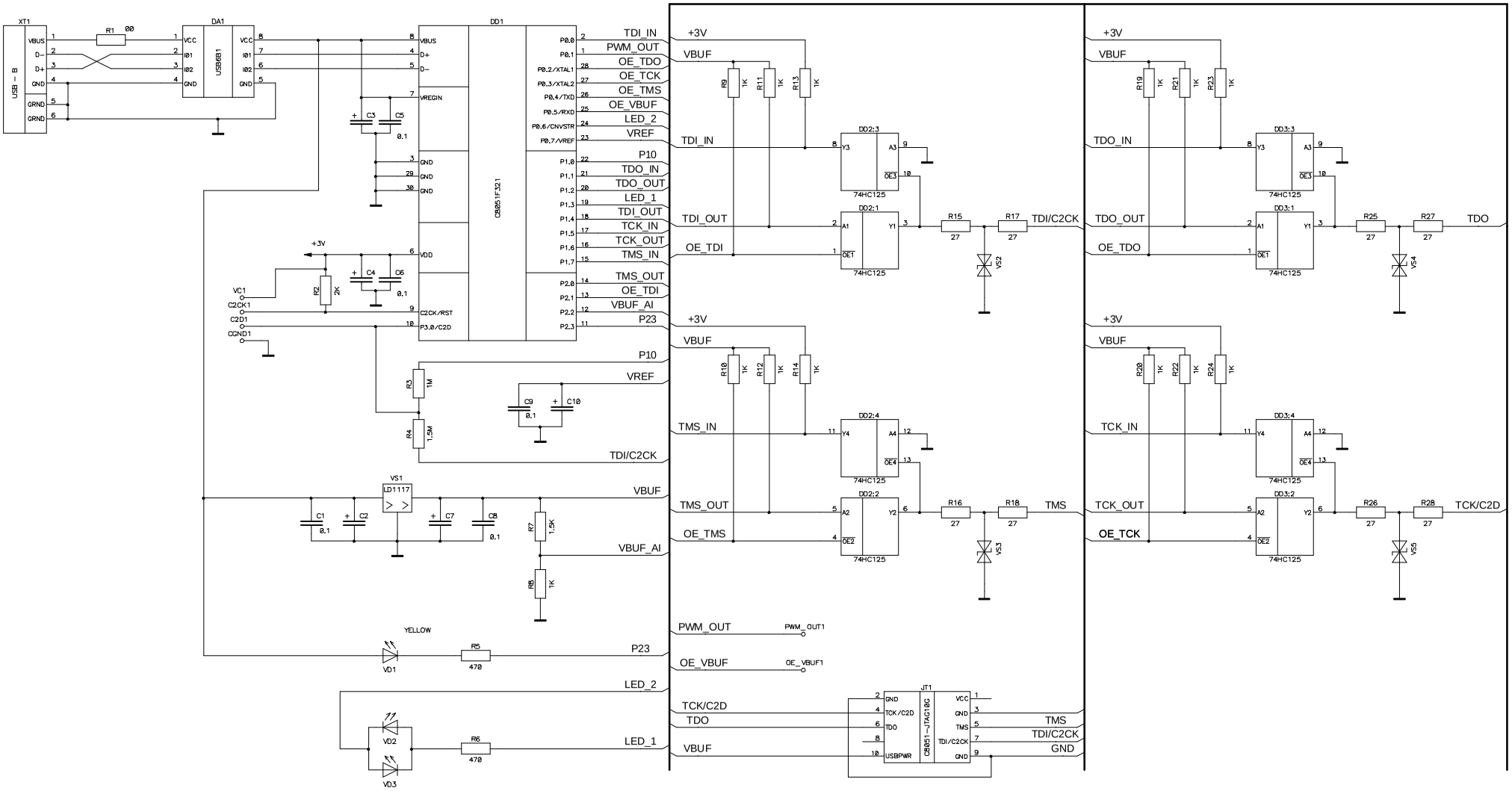
XT1
USB - B
VBUS
D-
D+
GND
GRND
GRND
R1 00
DA1
USB681
VCC
IO1
IO2
GND
DD1
CB051F321
VBUS
D+
D-
VREGIN
GND
GND
GND
VDD
C2CK/RST
P3.0/C2D
P0.0
P0.1
P0.2/XTAL1
P0.3/XTAL2
P0.4/TXD
P0.5/RXD
P0.6/CNVSTR
P0.7/VREF
P1.0
P1.1
P1.2
P1.3
P1.4
P1.5
P1.6
P1.7
P2.0
P2.1
P2.2
P2.3
TDI_IN
PWM_OUT
OE_TDO
OE_TCK
OE_TMS
OE_VBUF
LED_2
VREF
P10
TDO_IN
TDO_OUT
LED_1
TDI_OUT
TCK_IN
TCK_OUT
TMS_IN
TMS_OUT
OE_TDI
VBUF_AI
P23
C3
C5
0.1
+3V
C4
C6
0.1
R2 2K
VC1
C2CK1
C2D1
CGND1
R3 1M
R4 1.5M
C9
0.1
C10
TDI/C2CK
VS1
LD1117
C1
0.1
C2
C7
C8
0.1
R7 1.5K
R8 1K
VBUF
VBUF_AI
YELLOW
VD1
R5 470
P23
LED_2
VD2
VD3
R6 470
LED_1
+3V
VBUF
R9 1K
R11 1K
R13 1K
DD2:3
74HC125
DD2:1
74HC125
TDI_IN
TDI_OUT
OE_TDI
R15 27
R17 27
TDI/C2CK
VS2
R10 1K
R12 1K
R14 1K
DD2:4
74HC125
DD2:2
74HC125
TMS_IN
TMS_OUT
OE_TMS
R16 27
R18 27
TMS
VS3
PWM_OUT
PWM_OUT1
OE_VBUF
OE_VBUF1
JT1
CB051-JTAG10G
GND
TCK/C2D
TDO
USBPWR
VCC
GND
TMS
TDI/C2CK
GND
TCK/C2D
TDO
VBUF
TMS
TDI/C2CK
GND
R19 1K
R21 1K
R23 1K
DD3:3
74HC125
DD3:1
74HC125
TDO_IN
TDO_OUT
OE_TDO
R25 27
R27 27
TDO
VS4
R20 1K
R22 1K
R24 1K
DD3:4
74HC125
DD3:2
74HC125
TCK_IN
TCK_OUT
OE_TCK
R26 27
R28 27
TCK/C2D
VS5