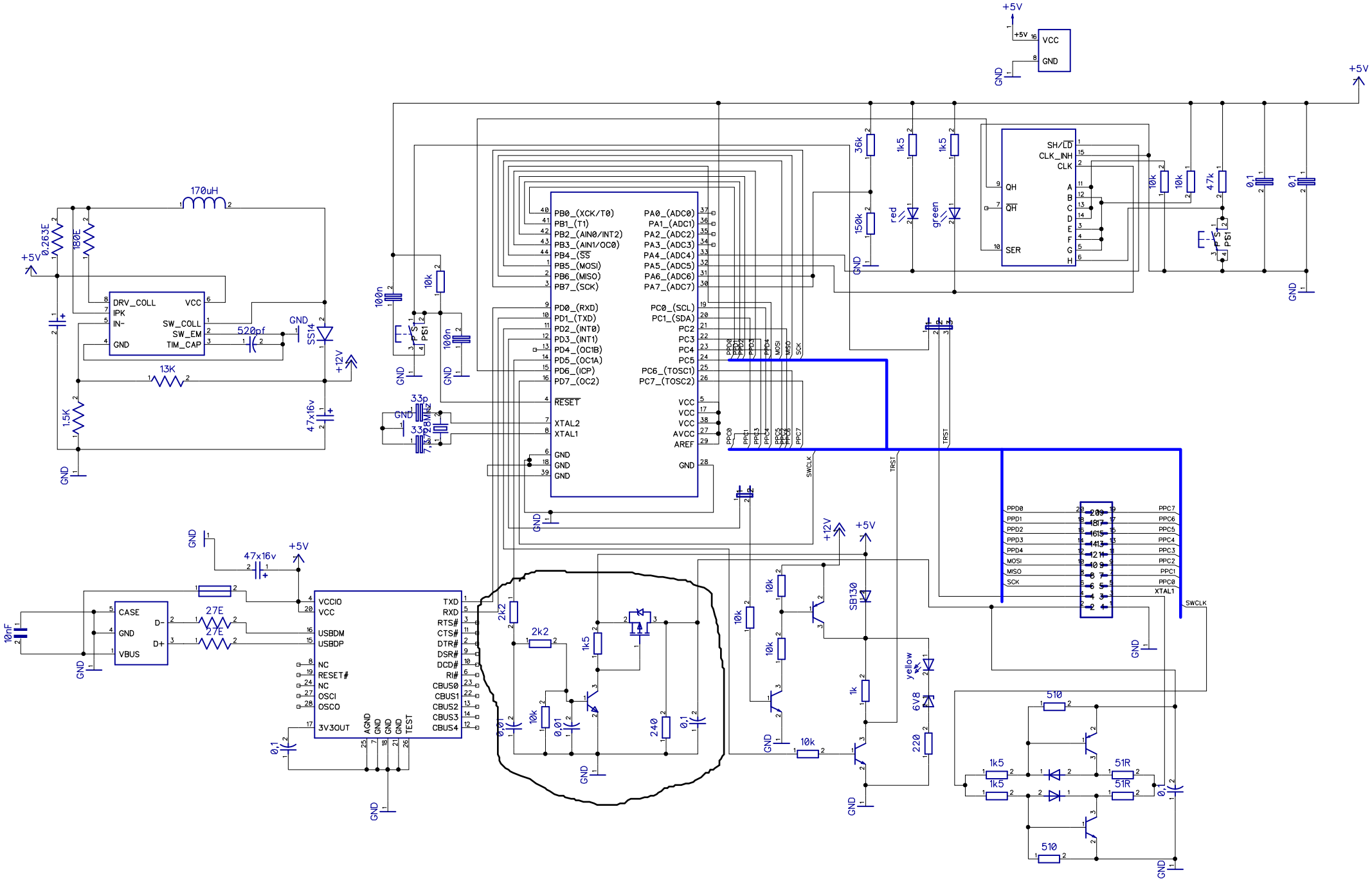
+5V
VCC
GND
170uH
0.263E
180E
DRV_COLL
IPK
IN-
GND
VCC
SW_COLL
SW_EM
TIM_CAP
520pf
SS14
+12V
13K
1.5K
47x16v
PB0_(XCK/T0)
PB1_(T1)
PB2_(AIN0/INT2)
PB3_(AIN1/OC0)
PB4_(SS)
PB5_(MOSI)
PB6_(MISO)
PB7_(SCK)
PD0_(RXD)
PD1_(TXD)
PD2_(INT0)
PD3_(INT1)
PD4_(OC1B)
PD5_(OC1A)
PD6_(ICP)
PD7_(OC2)
RESET
XTAL2
XTAL1
PA0_(ADC0)
PA1_(ADC1)
PA2_(ADC2)
PA3_(ADC3)
PA4_(ADC4)
PA5_(ADC5)
PA6_(ADC6)
PA7_(ADC7)
PC0_(SCL)
PC1_(SDA)
PC2
PC3
PC4
PC5
PC6_(TOSC1)
PC7_(TOSC2)
VCC
AVCC
AREF
100n
10k
PS1
33p
8MHz
36k
150k
1k5
red
green
SH/LD
CLK_INH
CLK
QH
SER
4.7k
0.1
SWCLK
TRST
PPD0
PPD1
PPD2
PPD3
PPD4
MOSI
MISO
SCK
PPC0
PPC1
PPC2
PPC3
PPC4
PPC5
PPC6
PPC7
XTAL1
CASE
D-
D+
VBUS
10nF
27E
VCCIO
USBDM
USBDP
NC
RESET#
OSCI
OSCO
3V3OUT
AGND
TEST
TXD
RXD
RTS#
CTS#
DTR#
DSR#
DCD#
RI#
CBUS0
CBUS1
CBUS2
CBUS3
CBUS4
2k2
240
SB130
yellow
6V8
220
1k
510
51R