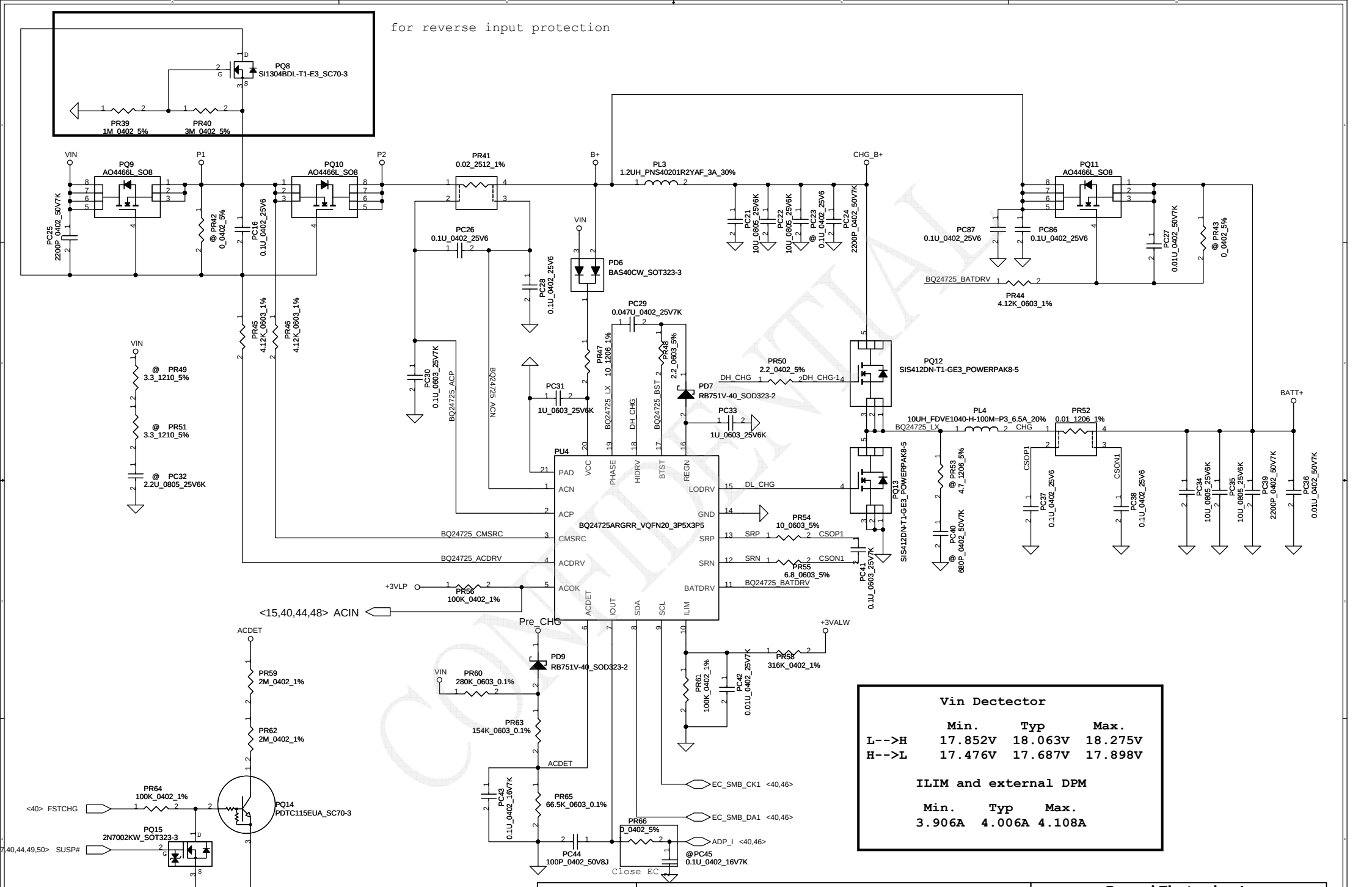

Vin Dectector

	Min.	Typ	Max.
L-->H	17.852V	18.063V	18.275V
H-->L	17.476V	17.687V	17.898V

ILIM and external DPM

Min.	Typ	Max.
3.906A	4.006A	4.108A

CONFIDENTIAL

Security Classification	Compal Secret Data		
Issued Date	2011/06/02	Deciphered Date	2012/06/02

THIS SHEET OF ENGINEERING DRAWING IS THE PROPRIETARY PROPERTY OF COMPAL ELECTRONICS, INC. AND CONTAINS CONFIDENTIAL AND TRADE SECRET INFORMATION. THIS SHEET MAY NOT BE TRANSFERED FROM THE CUSTODY OF THE COMPETENT DIVISION OF R&D DEPARTMENT EXCEPT AS AUTHORIZED BY COMPAL ELECTRONICS, INC. NEITHER THIS SHEET NOR THE INFORMATION IT CONTAINS MAY BE USED BY OR DISCLOSED TO ANY THIRD PARTY WITHOUT PRIOR WRITTEN CONSENT OF COMPAL ELECTRONICS, INC.

Compal Electronics, Inc.

Title: **SCHEMATIC,MB A7912**

Size: Custom | Document Number: **4019ID** | Rev: B

Date: Friday, January 06, 2012 | Sheet 47 of 60