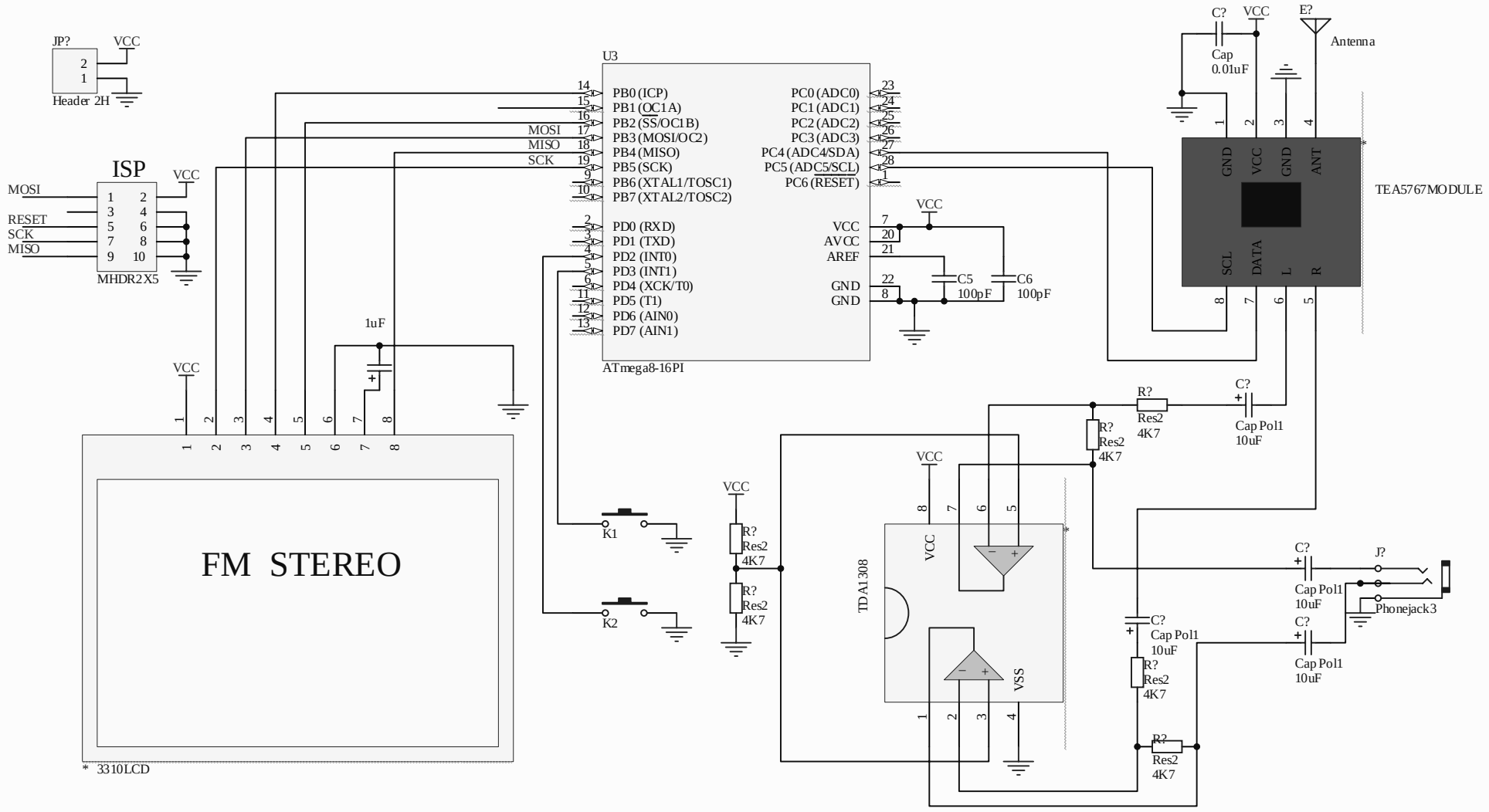

Title		
Size A4	Number	Revision
Date: 2006-4-4		Sheet of
File: G:\5767\Sheet1.SchDoc		Drawn By: