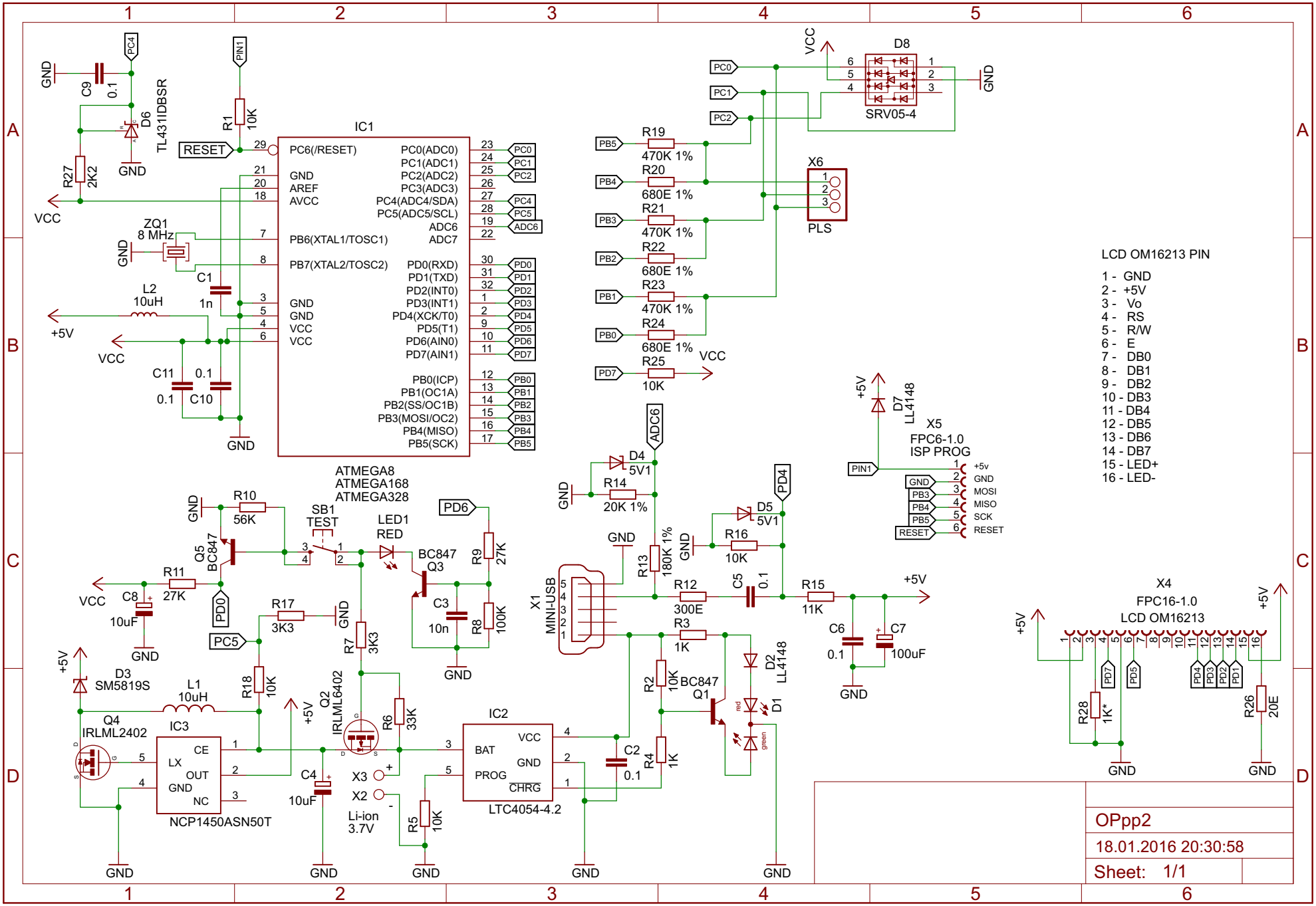
IC1
ATMEGA8
ATMEGA168
ATMEGA328
PC6(/RESET)
GND
AREF
AVCC
PB6(XTAL1/TOSC1)
PB7(XTAL2/TOSC2)
GND
GND
VCC
VCC
PC0(ADC0)
PC1(ADC1)
PC2(ADC2)
PC3(ADC3)
PC4(ADC4/SDA)
PC5(ADC5/SCL)
ADC6
ADC7
PD0(RXD)
PD1(TXD)
PD2(INT0)
PD3(INT1)
PD4(XCK/T0)
PD5(T1)
PD6(AIN0)
PD7(AIN1)
PB0(ICP)
PB1(OC1A)
PB2(SS/OC1B)
PB3(MOSI/OC2)
PB4(MISO)
PB5(SCK)
RESET
ZQ1
8 MHz
C1
1n
L2
10uH
+5V
VCC
C11
0.1
C10
0.1
C9
0.1
D6
TL431IDBSR
R27
2K2
R1
10K
D8
SRV05-4
X6
PLS
R19
470K 1%
R20
680E 1%
R21
470K 1%
R22
680E 1%
R23
470K 1%
R24
680E 1%
R25
10K
D7
LL4148
X5
FPC6-1.0
ISP PROG
+5v
GND
MOSI
MISO
SCK
RESET
LCD OM16213 PIN
1 - GND
2 - +5V
3 - Vo
4 - RS
5 - R/W
6 - E
7 - DB0
8 - DB1
9 - DB2
10 - DB3
11 - DB4
12 - DB5
13 - DB6
14 - DB7
15 - LED+
16 - LED-
D4
5V1
R14
20K 1%
D5
5V1
R16
10K
R13
180K 1%
R12
300E
C5
0.1
R15
11K
C6
0.1
C7
100uF
X1
MINI-USB
R3
1K
R2
10K
BC847
Q1
D2
LL4148
D1
red
green
R4
1K
C2
0.1
X4
FPC16-1.0
LCD OM16213
R28
1K*
R26
20E
R10
56K
SB1
TEST
LED1
RED
BC847
Q3
R9
27K
R8
100K
C3
10n
Q5
BC847
R11
27K
C8
10uF
R17
3K3
R7
3K3
R6
33K
R18
10K
D3
SM5819S
L1
10uH
Q4
IRLML2402
IC3
CE
LX
OUT
GND
NC
NCP1450ASN50T
C4
10uF
Q2
IRLML6402
IC2
BAT
VCC
GND
PROG
CHRG
LTC4054-4.2
X3
X2
Li-ion
3.7V
R5
10K
OPpp2
18.01.2016 20:30:58
Sheet: 1/1