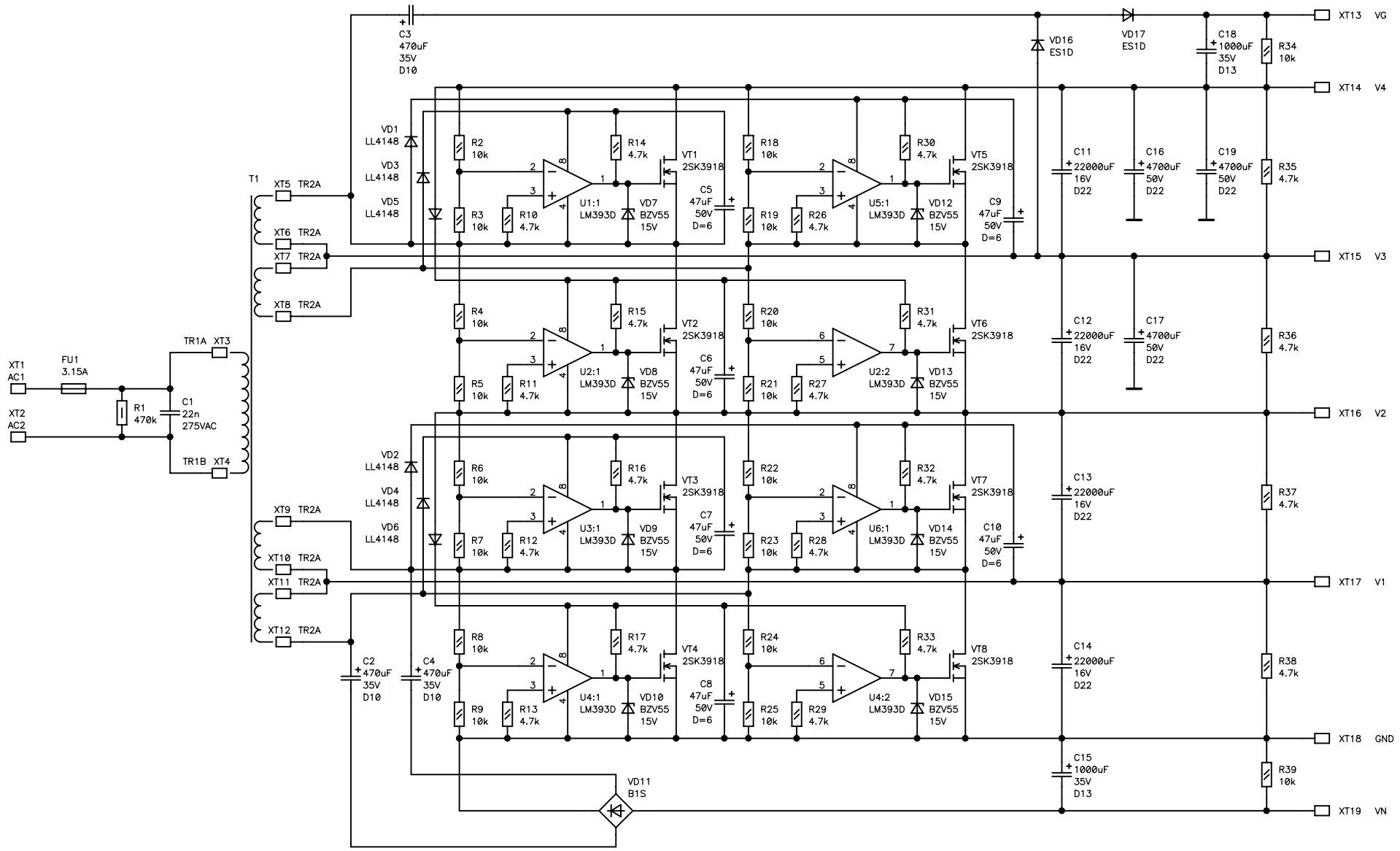

Company Name NSM lab		
Size A35	Title PSL-3604 (power supply board)	Rev A
Date Wed Mar 06, 2013		Drawn by NSM lab
Filename PSL-3604_pow_sym.sch		Sheet 1 of 1