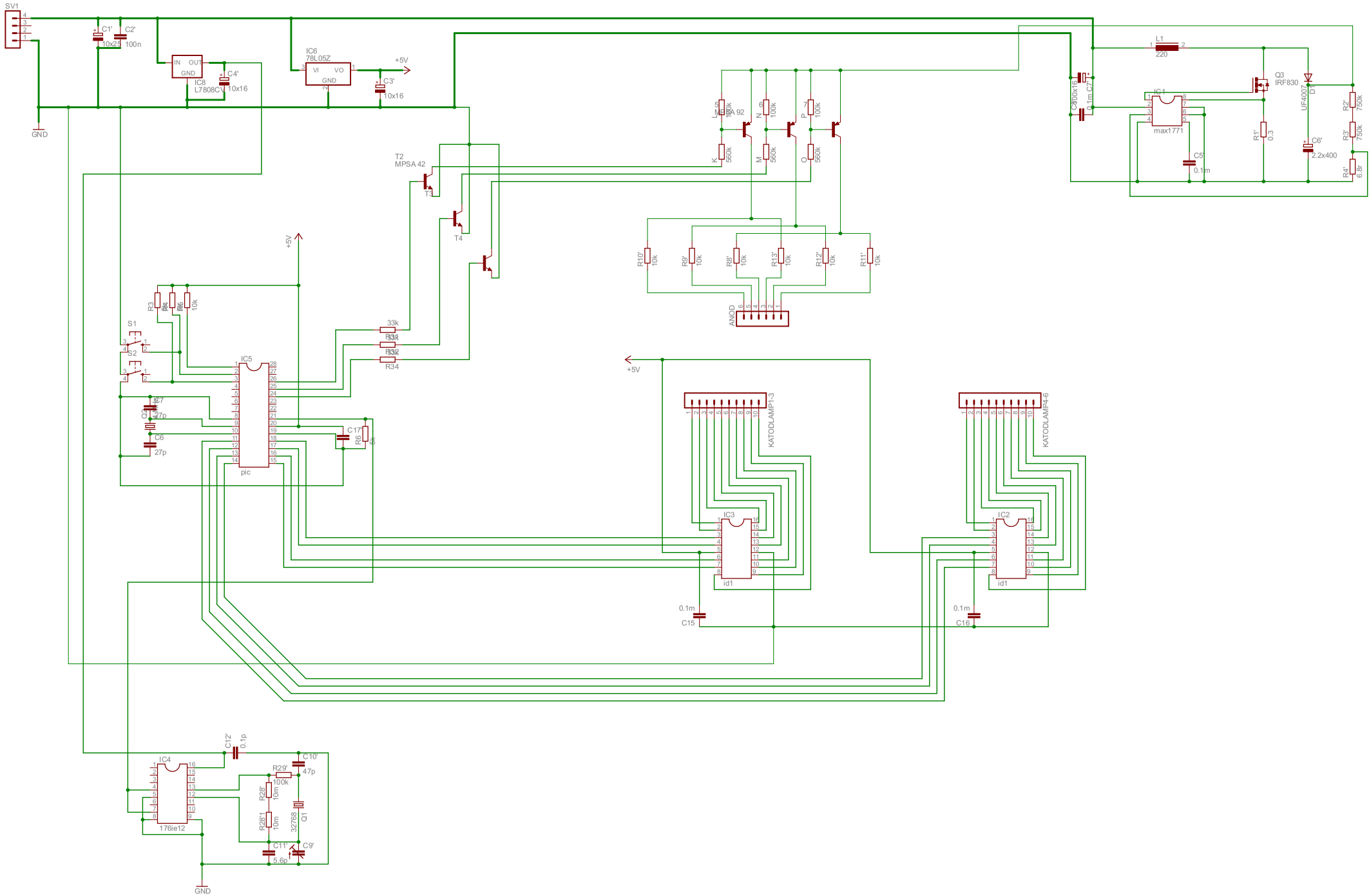
SV1
GND
C1'
10x25
C2'
100n
IN OUT
GND
IC8
L7808CV
C4'
10x16
IC6
78L05Z
VI VO
GND
+5V
C3'
10x16
T2
MPSA 42
T1
T4
L
N
P
K
M
O
560k
100k
R10'
R9'
R8'
R13'
R12'
R11'
10k
AND
L1
220
C8
100x16
C7'
0.1m
IC1
max1771
C5'
0.1m
Q3
IRF830
D1
UF4007
R1'
0.3
C6'
2.2x400
R2'
750k
R3'
750k
R4'
6.8r
S1
S2
R3
R4
R5
R6
R7
C7'
47p
C6
27p
IC5
pic
33k
R34
C17
R6
5k
KATODLAMP1-3
KATODLAMP4-6
IC3
IC2
id1
0.1m
C15
C16
IC4
176ie12
C12'
0.1p
R29
100k
C10'
47p
R28'
10m
R28
10m
Q1
32768
C11'
5.6p
C9'