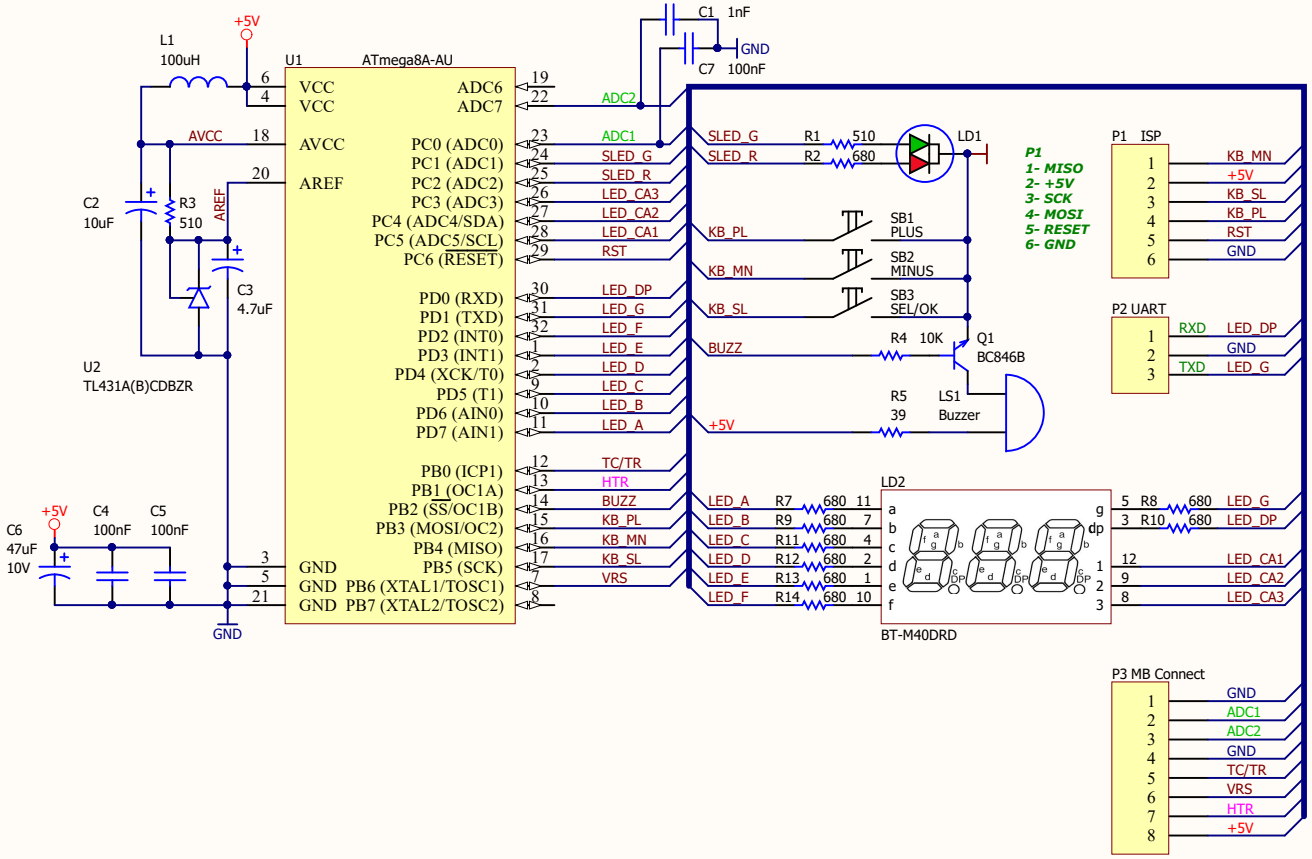

Title		
Size A4	Number	Revision
Date: 01.06.2015	Sheet of	
File: D:\Documents\..\DSSuT12_CB_v1.1x.SchDoc	Drawn By:	