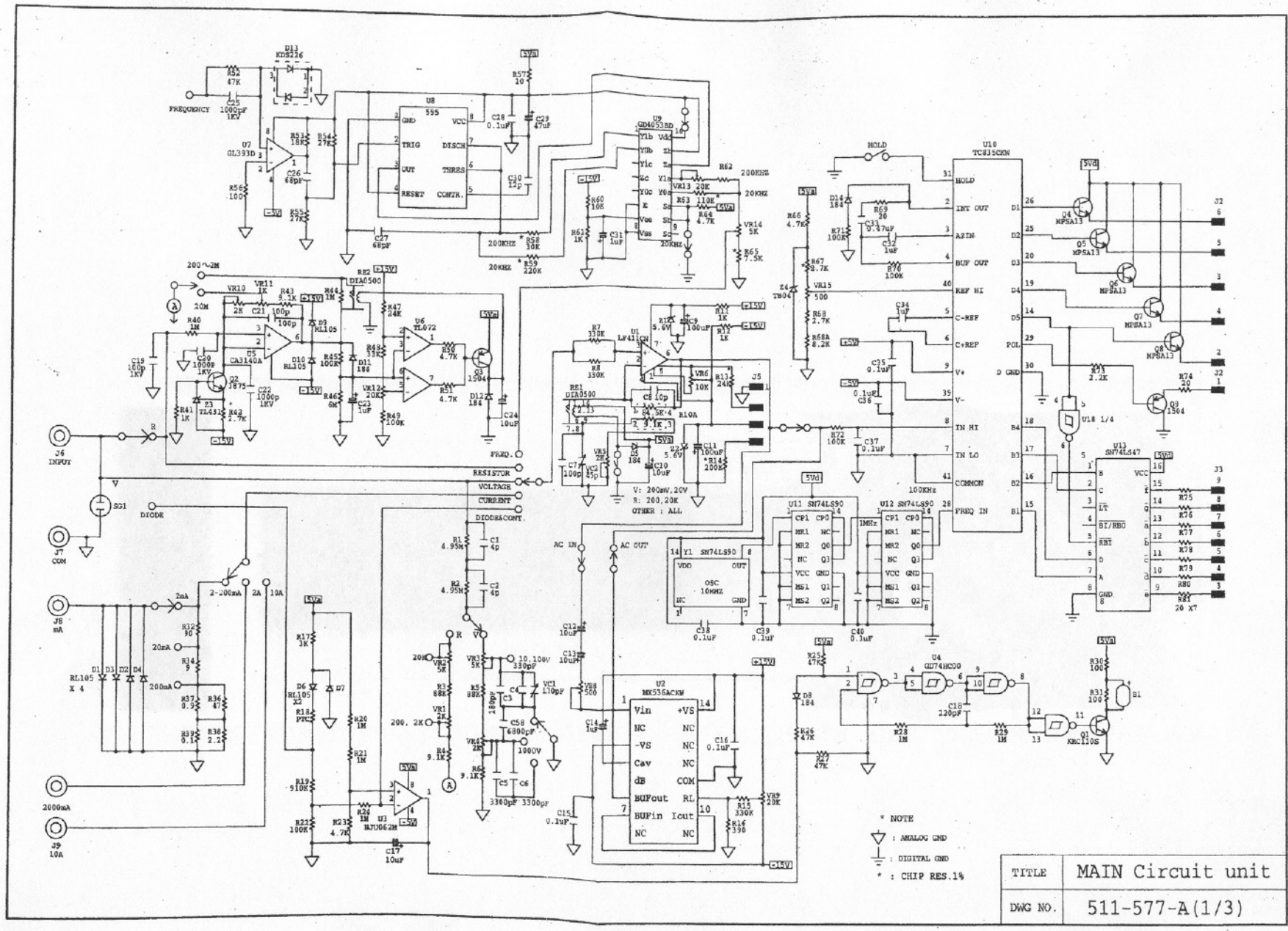
FREQUENCY
U8 555
U9 GD4053BD
U10 TC8356CKN
U7 GL393D
U5 CA3140A
U6 TL072
U1 LF411
U2 MX536ACKW
U3 NJU062M
U4 GD74HC00
U11 SN74LS90
U12 SN74LS90
U13 SN74LS47
OSC 10MHZ
HOLD
INT OUT
AZIN
BUF OUT
REF HI
C-REF
C+REF
V+
V-
IN HI
IN LO
COMMON
FREQ IN
D GND
100KHZ
1MHZ
J6 INPUT
J7 COM
J8 mA
J9 10A
2000mA
SG1
DIODE
FREQ.
RESISTOR
VOLTAGE
CURRENT
DIODE&CONT.
AC IN
AC OUT
V: 200mV,20V
R: 200,20K
OTHER : ALL
* NOTE
: ANALOG GND
: DIGITAL GND
* : CHIP RES.1%
TITLE
MAIN Circuit unit
DWG NO.
511-577-A(1/3)