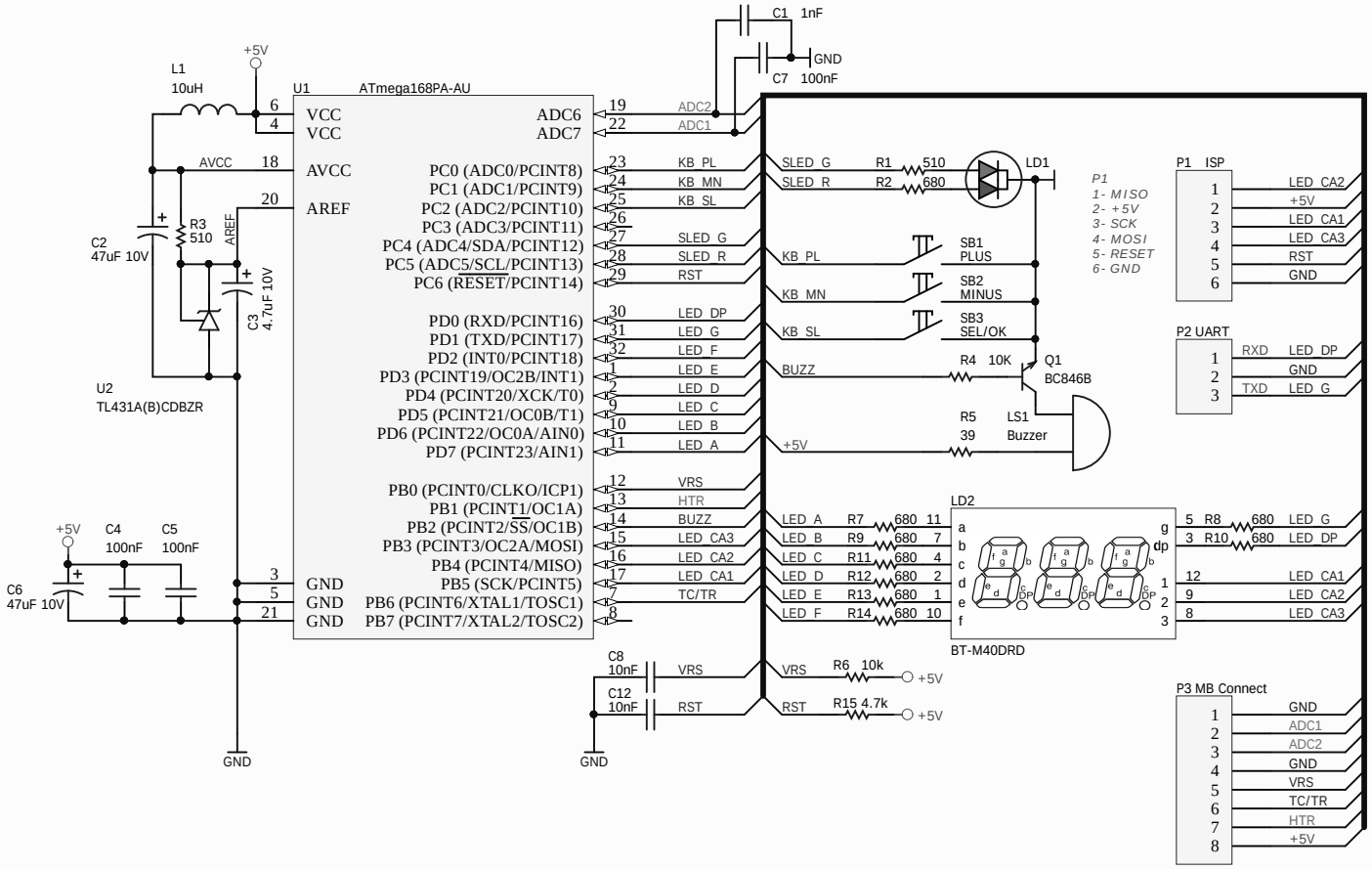

Title		
Size A4	Number	Revision
Date: 26.03.2016	Sheet of	
File: D:\Documents\..\DSSuT12_CB_v1.2x.SchDoc	Drawn By:	

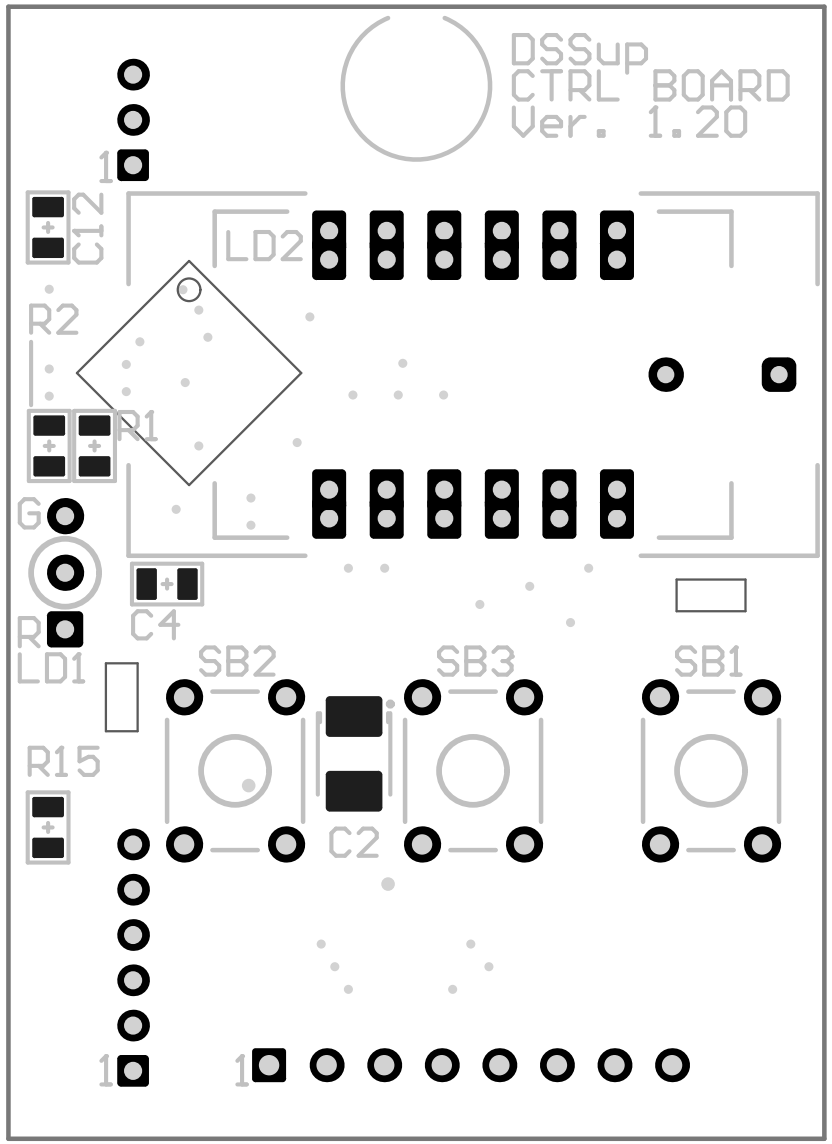
DSSup
CTRL BOARD
Ver. 1.20
1
C12
LD2
R2
R1
G
C4
R
LD1
SB2
SB3
SB1
R15
C2
1
1

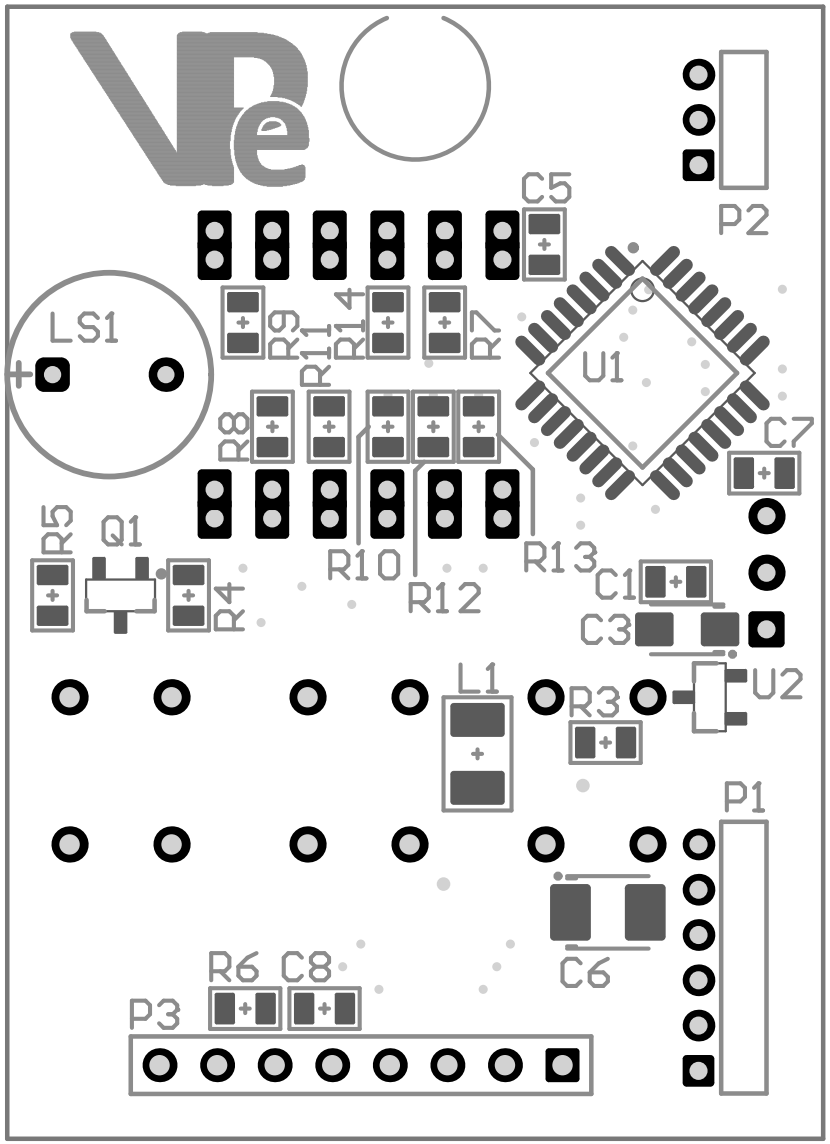
C5
P2
LS1
R9
R11
R14
R7
U1
R8
C7
R5
Q1
R4
R10
R12
R13
C1
C3
U2
L1
R3
P1
C6
R6
C8
P3