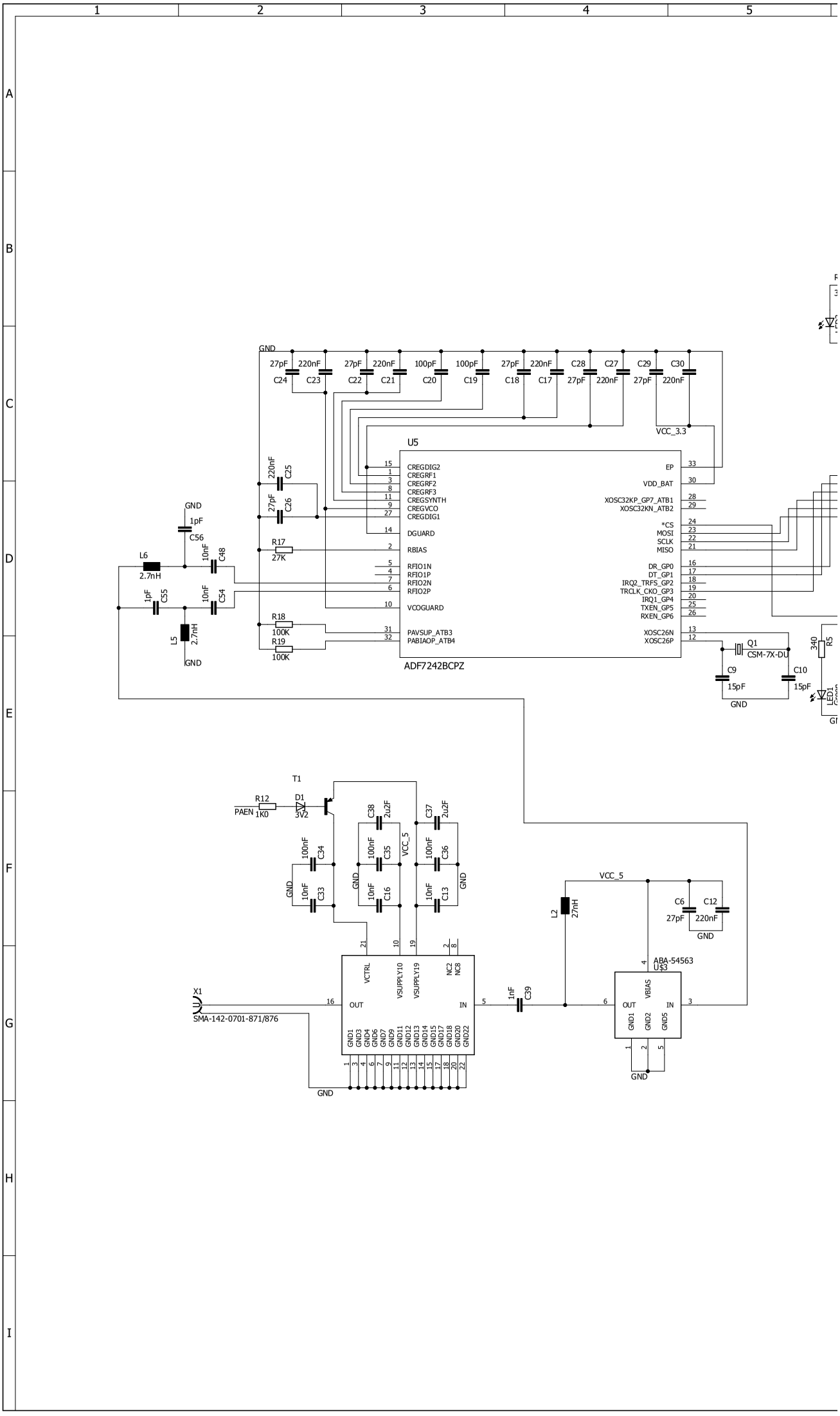
U5
ADF7242BCPZ
CREGDIG2
CREGRF1
CREGRF2
CREGRF3
CREGSYNTH
CREGVCO
CREGDIG1
DGUARD
RBIAS
RFIO1N
RFIO1P
RFIO2N
RFIO2P
VCOGUARD
PAVSUP_ATB3
PABIAOP_ATB4
EP
VDD_BAT
XOSC32KP_GP7_ATB1
XOSC32KN_ATB2
*CS
MOSI
SCLK
MISO
DR_GP0
DT_GP1
IRQ2_TRFS_GP2
TRCLK_CKO_GP3
IRQ1_GP4
TXEN_GP5
RXEN_GP6
XOSC26N
XOSC26P
GND
VCC_3.3
VCC_5
Q1
CSM-7X-DU
C9
15pF
C10
15pF
R5
340
R17
27K
R18
100K
R19
100K
L6
2.7nH
L5
2.7nH
C56
1pF
C55
1pF
C48
10nF
C54
10nF
C24
27pF
C23
220nF
C22
27pF
C21
220nF
C20
100pF
C19
100pF
C18
27pF
C17
220nF
C28
27pF
C27
220nF
C29
27pF
C30
220nF
C25
220nF
C26
27pF
T1
R12
PAEN
1K0
D1
3V2
C38
2u2F
C37
2u2F
C34
100nF
C35
100nF
C36
100nF
C33
10nF
C16
10nF
C13
10nF
L2
27nH
C6
27pF
C12
220nF
ABA-54563
U$3
VBIAS
OUT
IN
GND1
GND2
GND5
X1
SMA-142-0701-871/876
VCTRL
VSUPPLY10
VSUPPLY19
NC2
NC8
GND1
GND3
GND4
GND6
GND7
GND9
GND11
GND12
GND13
GND14
GND15
GND17
GND18
GND20
GND22
C39
1nF

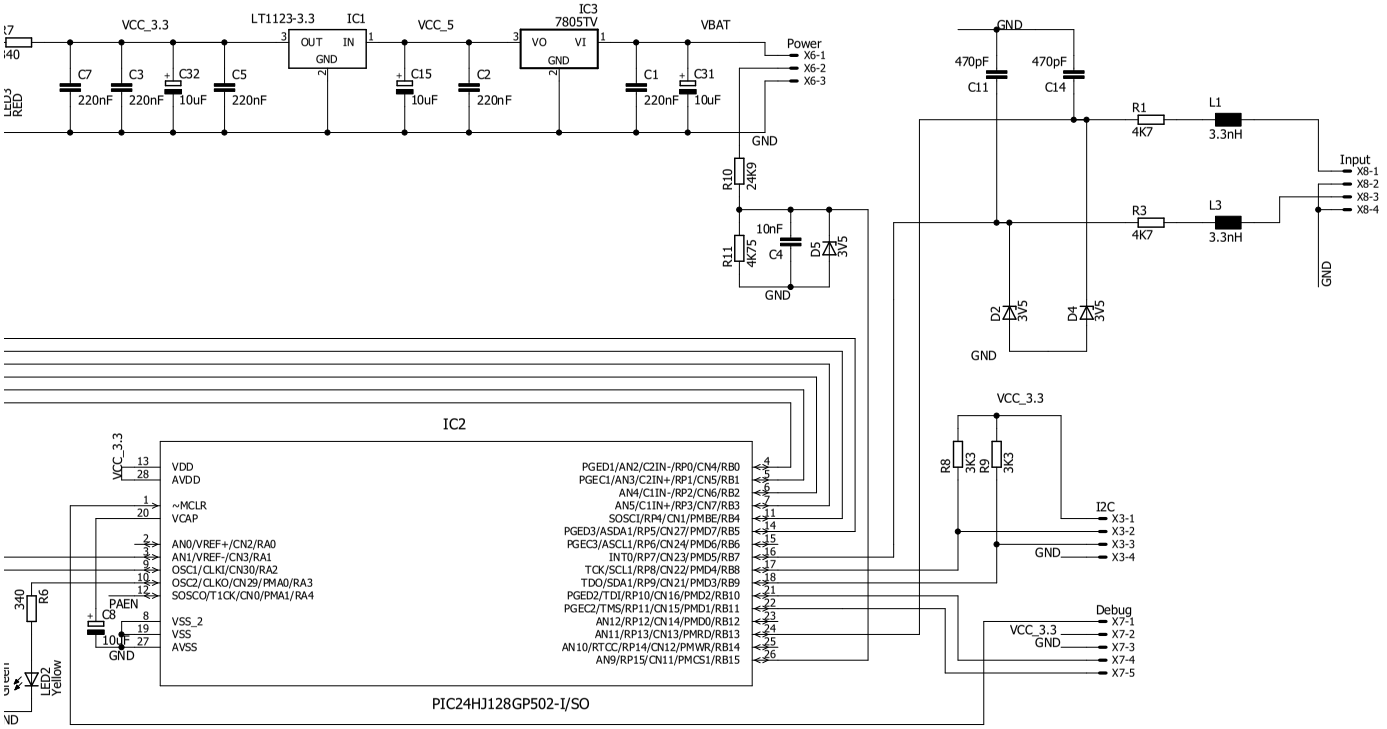

Sapphire Telemetry Transmitter

TITLE: sapphire_tx_board	
Document Number:	REV: 1.1a
Date: 29.08.2016 12:04	Sheet: 1/1