PLT-203-1

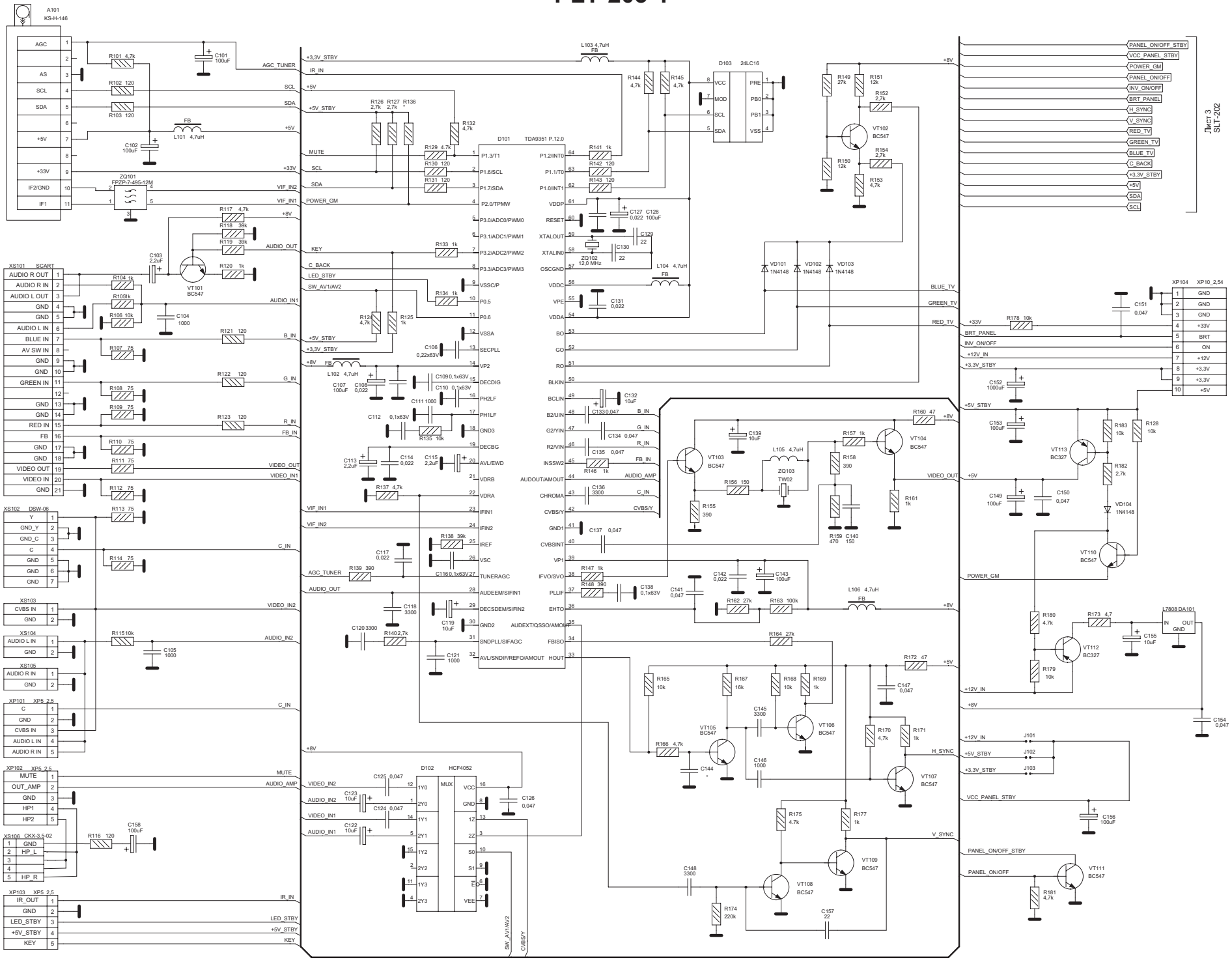
A101
KS-H-146
AGC
AS
SCL
SDA
+5V
+33V
IF2/GND
IF1
ZQ101
FPZP-7-495-12M
D101
TDA9351 P.12.0
D102
HCF4052
D103
24LC16
ZQ102
12,0 MHz
XS101 SCART
AUDIO R OUT
AUDIO R IN
AUDIO L OUT
GND
AUDIO L IN
BLUE IN
AV SW IN
GREEN IN
RED IN
FB
VIDEO OUT
VIDEO IN
XS102 DSW-06
Y
GND_Y
GND_C
C
XS103
CVBS IN
XS104
AUDIO L IN
XS105
AUDIO R IN
XP101 XP5_2,5
XP102 XP5_2,5
MUTE
OUT_AMP
HP1
HP2
XS106 CKX-3,5-02
HP_L
HP_R
XP103 XP5_2,5
IR_OUT
LED_STBY
KEY
AGC_TUNER
IR_IN
SCL
SDA
+5V_STBY
+33V
VIF_IN2
VIF_IN1
POWER_GM
+8V
AUDIO_OUT
C_BACK
SW_AV1/AV2
AUDIO_IN1
B_IN
G_IN
R_IN
FB_IN
VIDEO_OUT
VIDEO_IN1
VIDEO_IN2
AUDIO_IN2
AUDIO_AMP
BLUE_TV
GREEN_TV
RED_TV
VIDEO_IN2
AUDIO_IN2
VIDEO_IN1
AUDIO_IN1
SW_AV1/AV2
CVBSY
PANEL_ON/OFF_STBY
VCC_PANEL_STBY
POWER_GM
PANEL_ON/OFF
INV_ON/OFF
BRT_PANEL
H_SYNC
V_SYNC
RED_TV
GREEN_TV
BLUE_TV
C_BACK
+3,3V_STBY
+5V
SDA
SCL
Лист 3
SLT-202
XP104 XP10_2,54
GND
+33V
BRT
ON
+12V
+3,3V
+5V
BRT_PANEL
INV_ON/OFF
+12V_IN
+3,3V_STBY
+5V_STBY
VIDEO_OUT
POWER_GM
+12V_IN
H_SYNC
+5V_STBY
+3,3V_STBY
VCC_PANEL_STBY
V_SYNC
PANEL_ON/OFF_STBY
PANEL_ON/OFF
L7808 DA101
IN
OUT
GND
J101
J102
J103

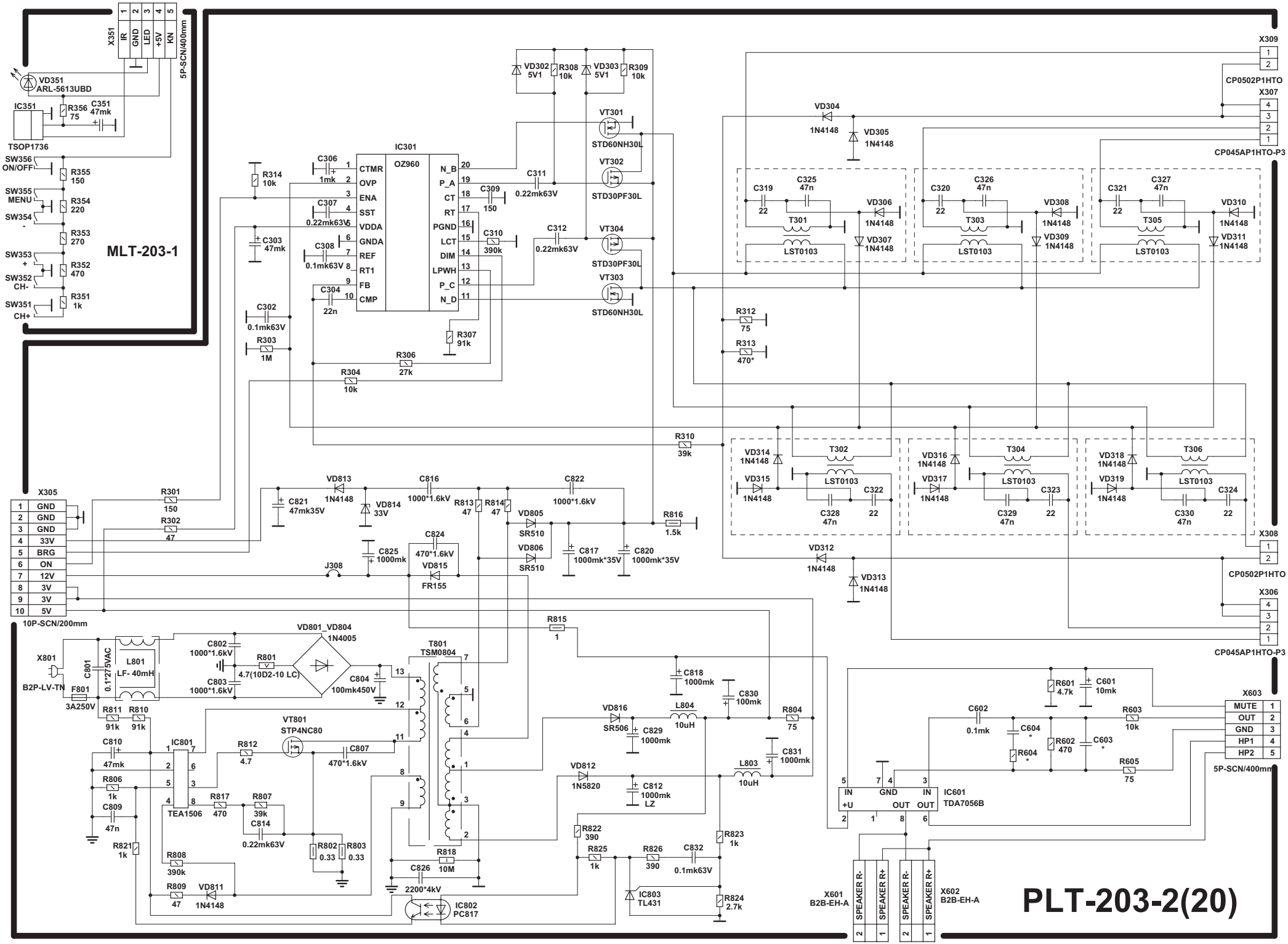
MLT-203-1
PLT-203-2(20)
X351
IR
GND
LED
+5V
KN
5P-SCN/400mm
VD351
ARL-5613UBD
IC351
TSOP1736
R356
75
C351
47mk
SW356
ON/OFF
SW355
MENU
SW354
SW353
SW352
CH-
SW351
CH+
R355
150
R354
220
R353
270
R352
470
R351
1k
IC301
OZ960
CTMR
OVP
ENA
SST
VDDA
GNDA
REF
RT1
FB
CMP
N_B
P_A
CT
RT
PGND
LCT
DIM
LPWH
P_C
N_D
C306
1mk
C307
0.22mk63V
C308
0.1mk63V
C304
22n
C309
150
C310
390k
C311
0.22mk63V
C312
0.22mk63V
R314
10k
C303
47mk
C302
0.1mk63V
R303
1M
R304
10k
R306
27k
R307
91k
VD302
5V1
R308
10k
VD303
5V1
R309
10k
VT301
STD60NH30L
VT302
STD30PF30L
VT304
STD30PF30L
VT303
STD60NH30L
R312
75
R313
470*
R310
39k
X309
CP0502P1HTO
X307
CP045AP1HTO-P3
VD304
1N4148
VD305
1N4148
C319
22
C325
47n
T301
LST0103
VD306
1N4148
VD307
1N4148
C320
22
C326
47n
T303
LST0103
VD308
1N4148
VD309
1N4148
C321
22
C327
47n
T305
LST0103
VD310
1N4148
VD311
1N4148
VD314
1N4148
VD315
1N4148
T302
LST0103
C328
47n
C322
22
VD316
1N4148
VD317
1N4148
T304
LST0103
C329
47n
C323
22
VD318
1N4148
VD319
1N4148
T306
LST0103
C330
47n
C324
22
X308
CP0502P1HTO
VD312
1N4148
VD313
1N4148
X306
CP045AP1HTO-P3
X305
GND
GND
GND
33V
BRG
ON
12V
3V
3V
5V
10P-SCN/200mm
R301
150
R302
47
VD813
1N4148
VD814
33V
C821
47mk35V
C816
1000*1.6kV
R813
47
R814
47
C822
1000*1.6kV
VD805
SR510
VD806
SR510
R816
1.5k
C824
470*1.6kV
VD815
FR155
C825
1000mk
J308
C817
1000mk*35V
C820
1000mk*35V
R815
1
X801
B2P-LV-TN
F801
3A250V
C801
0.1*275VAC
L801
LF- 40mH
C802
1000*1.6kV
C803
1000*1.6kV
R801
4.7(10D2-10 LC)
VD801_VD804
1N4005
C804
100mk450V
R811
91k
R810
91k
C810
47mk
R806
1k
C809
47n
R821
1k
IC801
TEA1506
R812
4.7
VT801
STP4NC80
C807
470*1.6kV
R817
470
R807
39k
C814
0.22mk63V
R802
0.33
R803
0.33
R808
390k
R809
47
VD811
1N4148
T801
TSM0804
R818
10M
C826
2200*4kV
IC802
PC817
C818
1000mk
C830
100mk
VD816
SR506
C829
1000mk
L804
10uH
R804
75
C831
1000mk
VD812
1N5820
C812
1000mk
LZ
L803
10uH
R822
390
R825
1k
R826
390
C832
0.1mk63V
R823
1k
IC803
TL431
R824
2.7k
R601
4.7k
C601
10mk
C602
0.1mk
C604
*
R604
*
R602
470
C603
*
R603
10k
R605
75
IC601
TDA7056B
IN
+U
GND
OUT
IN
OUT
X603
MUTE
OUT
GND
HP1
HP2
5P-SCN/400mm
X601
B2B-EH-A
SPEAKER R-
SPEAKER R+
X602
B2B-EH-A
SPEAKER R-
SPEAKER R+

SLT-203

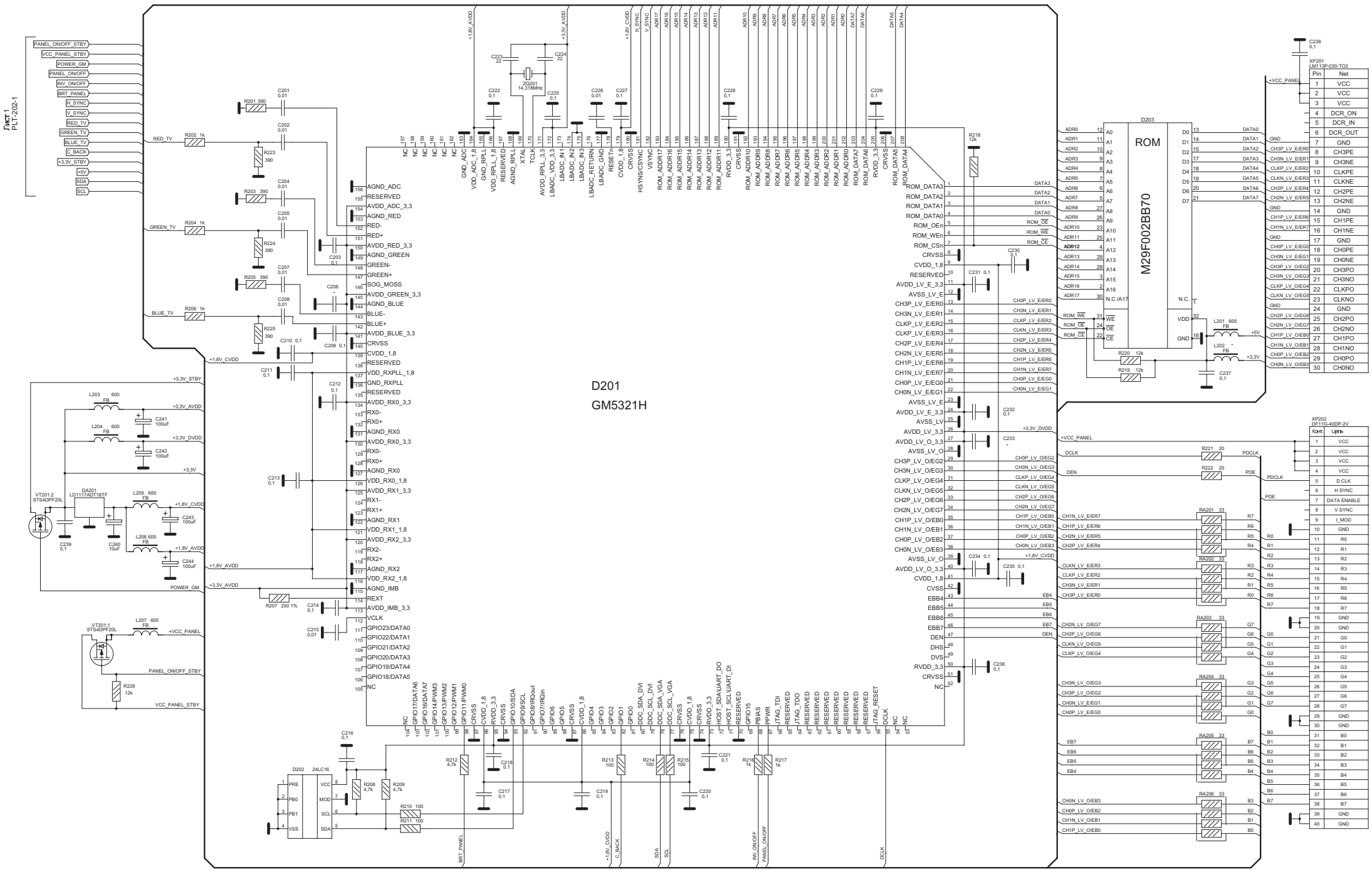
Лист 1
PLT-202-1
D201
GM5321H
D203
ROM
M29F002BB70
XP201
LM113P-030-TO2
XP202
DF11G-40DP-2V
D202 24LC16
DA201
LD1117ADT18TF
VT201:2
STS4DPF20L
VT201:1
STS4DPF20L
ZQ201
14.318MHz