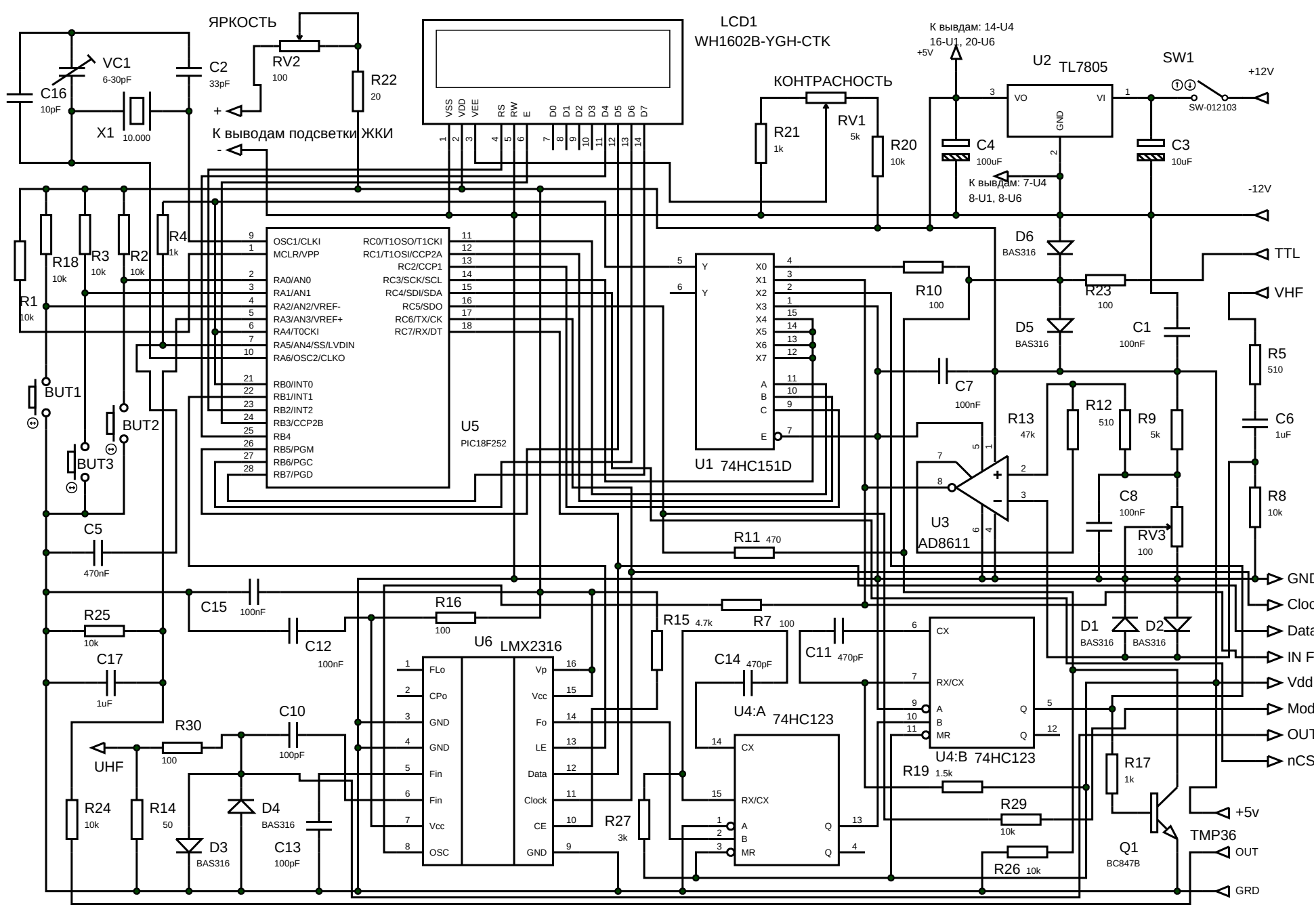
ЯРКОСТЬ
RV2
100
R22
20
LCD1
WH1602B-YGH-CTK
VSS VDD VEE RS RW E D0 D1 D2 D3 D4 D5 D6 D7
К выводам подсветки ЖКИ
VC1
6-30pF
C2
33pF
C16
10pF
X1
10.000
КОНТРАСНОСТЬ
RV1
5k
R21
1k
R20
10k
К выводам: 14-U4
16-U1, 20-U6
+5V
U2
TL7805
VO
VI
GND
SW1
SW-012103
+12V
C4
100uF
C3
10uF
К выводам: 7-U4
8-U1, 8-U6
-12V
R18
10k
R3
10k
R2
10k
R4
1k
R1
10k
OSC1/CLKI
MCLR/VPP
RA0/AN0
RA1/AN1
RA2/AN2/VREF-
RA3/AN3/VREF+
RA4/T0CKI
RA5/AN4/SS/LVDIN
RA6/OSC2/CLKO
RB0/INT0
RB1/INT1
RB2/INT2
RB3/CCP2B
RB4
RB5/PGM
RB6/PGC
RB7/PGD
RC0/T1OSO/T1CKI
RC1/T1OSI/CCP2A
RC2/CCP1
RC3/SCK/SCL
RC4/SDI/SDA
RC5/SDO
RC6/TX/CK
RC7/RX/DT
U5
PIC18F252
U1 74HC151D
X0 X1 X2 X3 X4 X5 X6 X7
A B C E
Y Y
R10
100
D6
BAS316
D5
BAS316
R23
100
C1
100nF
TTL
VHF
R5
510
C6
1uF
R8
10k
C7
100nF
R13
47k
R12
510
R9
5k
C8
100nF
RV3
100
U3
AD8611
R11 470
BUT1
BUT2
BUT3
C5
470nF
C15
100nF
R25
10k
C12
100nF
C17
1uF
R16
100
U6 LMX2316
FLo CPo GND GND Fin Fin Vcc OSC
Vp Vcc Fo LE Data Clock CE GND
R15 4.7k
R7 100
C14 470pF
U4:A 74HC123
CX RX/CX A B MR Q Q
C11 470pF
U4:B 74HC123
D1
BAS316
D2
BAS316
GND
Clock
Data
IN F
Vdd
Mod
OUT
nCS
R30
100
C10
100pF
UHF
R24
10k
R14
50
D4
BAS316
D3
BAS316
C13
100pF
R27
3k
R19 1.5k
R29
10k
R26 10k
R17
1k
Q1
BC847B
TMP36
+5v
OUT
GRD