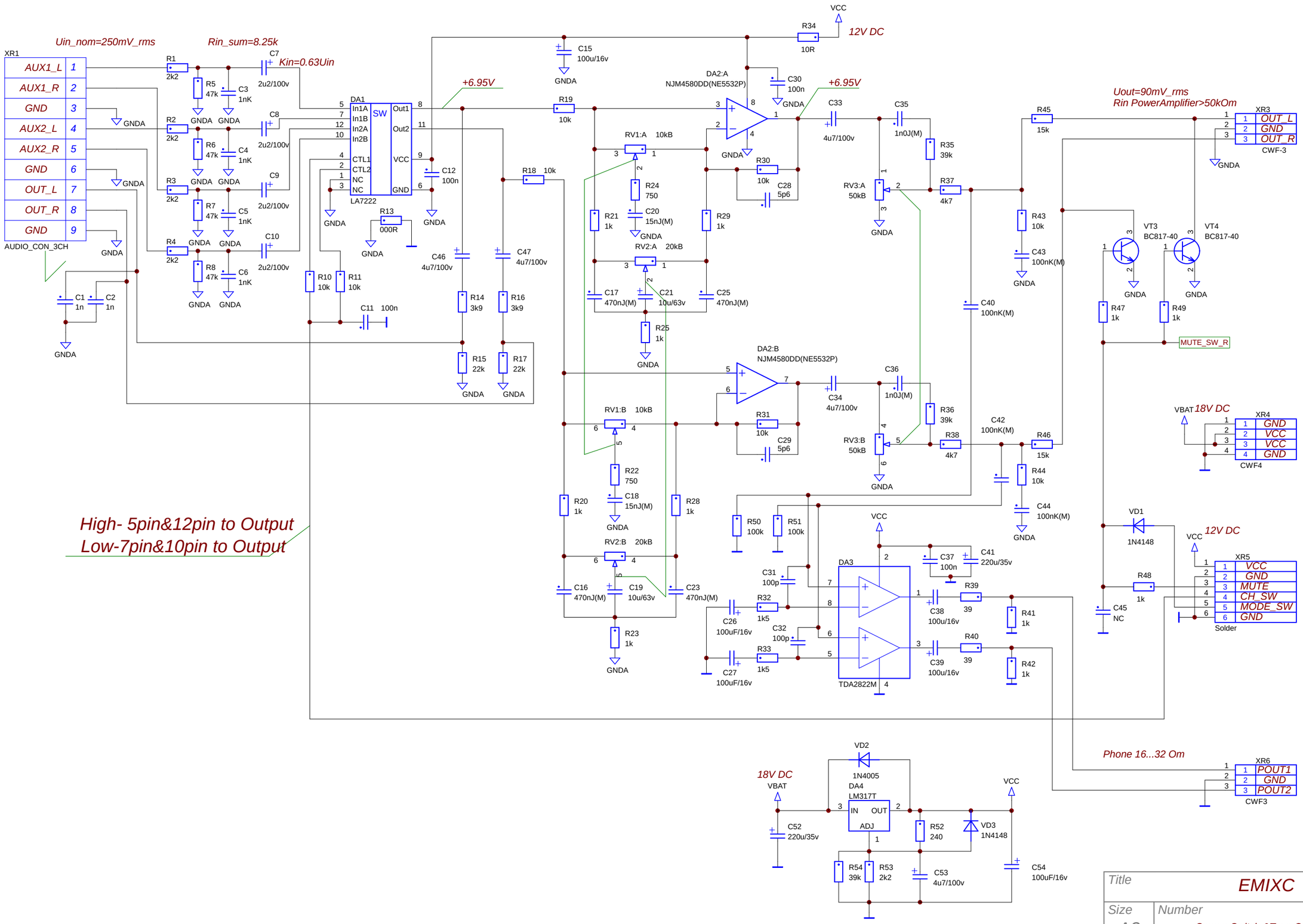

Title	EMIXC		
Size A3	Number Source Switch &Tone Control		Rev 0.2R
Date 30.04.2013		Drawn by EMiq	
Filename		Sheet 1 of	