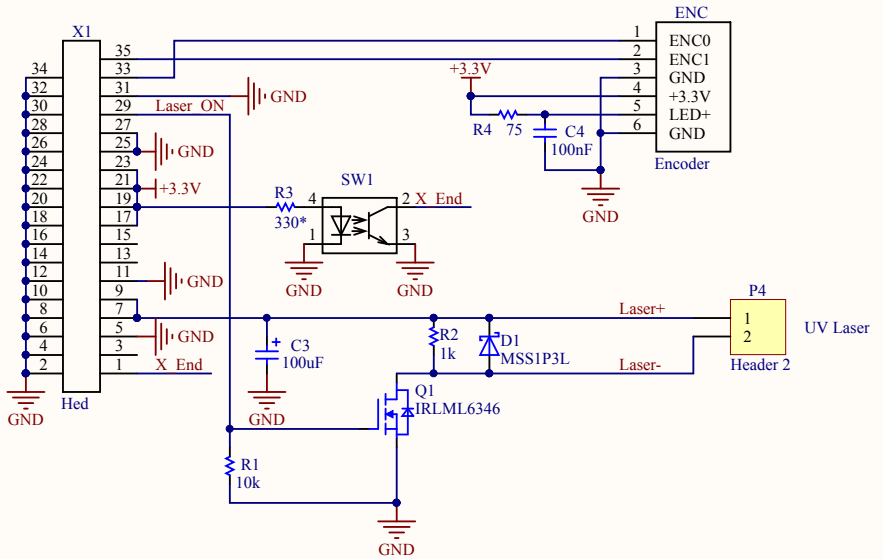

Title	*Canon-IP1000 HLDI UV-Laser Hed*		Serj_K
Size: A4	Number:	Revision: 1.0	
Date: 14/02/2017	Time: 15:17:17	Sheet 1 of 1	
File: hed.SchDoc			