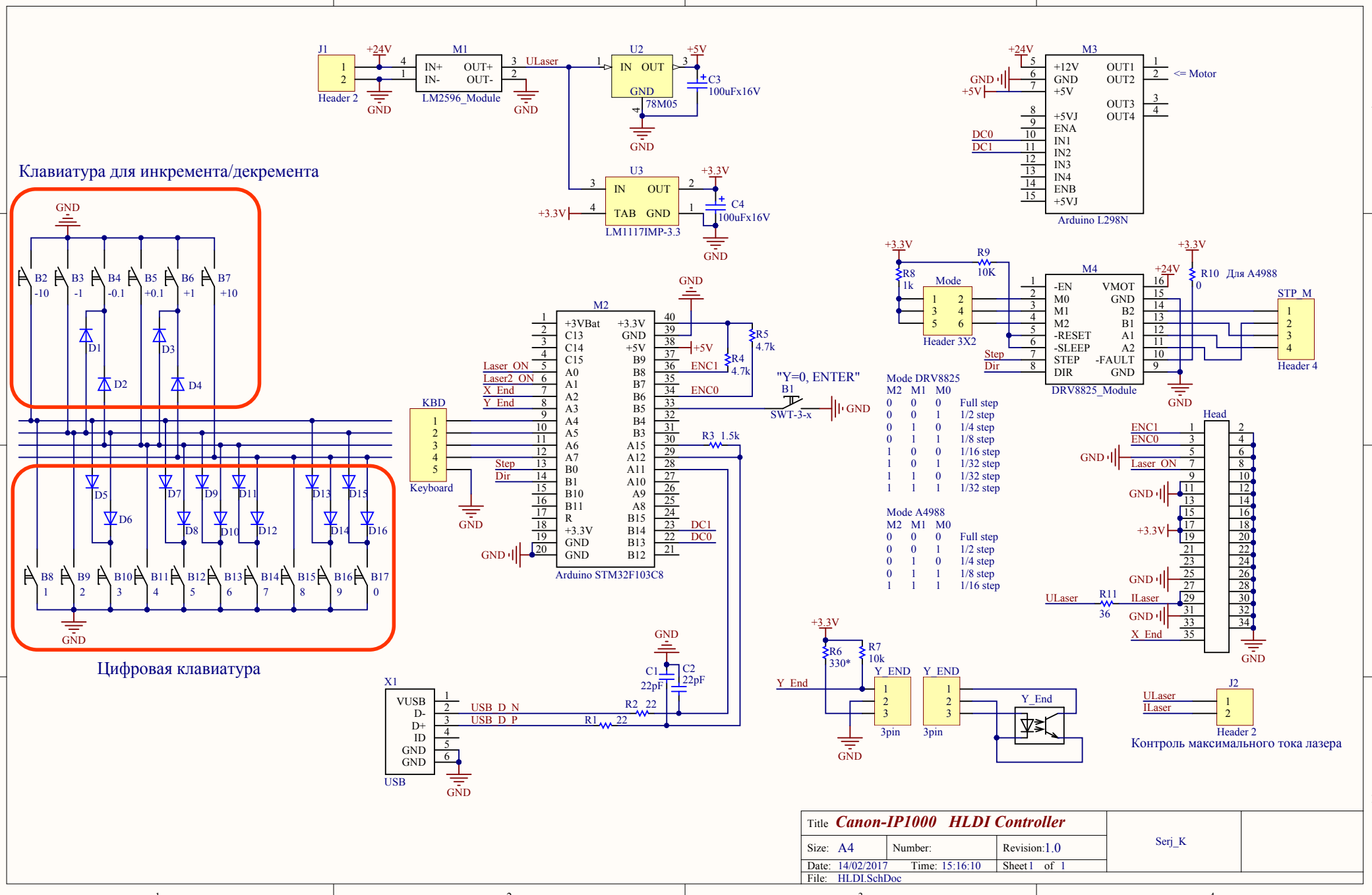

Title	*Canon-IP1000 HLDI Controller*		Serj_K
Size: A4	Number:	Revision: 1.0	
Date: 14/02/2017	Time: 15:16:10	Sheet 1 of 1	
File: HLDI.SchDoc			