BLAUPUNKT

AUTORADIO

EU
T-Line 2

Boston C31

7 641 125 310
7 641 125 510

8 622 402 859 BN-ST 02/02

Schaltbild • Circuit diagram

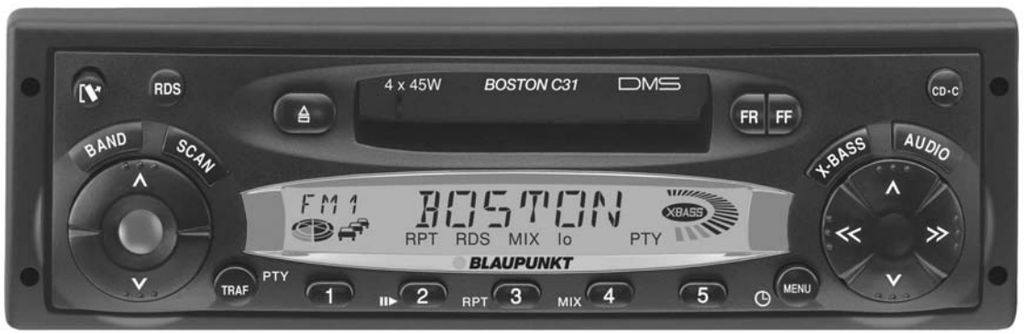

Inhaltsverzeichnis / Table of contents

Schaltbild Hauptplatte 4604 D05
- Bestückungsvarianten 2
- Blockschaltbild 3
- Audio-Endstufe 4
- Tuner 5
- Audio Signal Verarbeitung 6
- Prozessor 7
- Spannungsversorgung 8
- Schnittstellen 9

Layout Hauptplatte 4604 D05 ..... 10 - 12

NEU!

Schaltbild Hauptplatte 4604 D06
- **Bestückungsvarianten 13**
- **Blockschaltbild 14**
- **Audio-Endstufe 15**
- **Tuner 16**
- **Audio Signal Verarbeitung 17**
- **Prozessor 18**
- **Spannungsversorgung 19**
- **Schnittstellen 20**

Layout Hauptplatte 4604 D06 ..... 21 - 23

Schaltbild Schalterplatte 4609 D02 24
Layout Schalterplatte 4609 D02 25
Schaltbild Kassetten-Laufwerk ADC1400 26
Schaltbild Anschlußplatte 3275 D01 27
Layout Anschlußplatte 3275 D01 27

Circuit diagram Main board 4604 D05
- Mounting version 2
- Block diagram 3
- Power amplifier 4
- Tuner 5
- Audio signal processing 6
- Processor 7
- Power supply 8
- Interfaces 9

Layout Main board 4604 D05 ..... 10 - 12

NEW!

Circuit diagram Main board 4604 D06
- **Mounting version 13**
- **Block diagram 14**
- **Power amplifier 15**
- **Tuner 16**
- **Audio signal processing 17**
- **Processor 18**
- **Power supply 19**
- **Interfaces 20**

Layout Main board 4604 D06 ..... 21 - 23

Circuit diagram Key board 4609 D02 24
Layout Key board 4609 D02 25
Circuit diagram Cassette mechanism ADC1400 26
Circuit diagram Connector board 3275 D01 27
Layout Connector board 3275 D01 27

HAUPTPLATTE
MAIN BOARD

Blockschaltbild
Block diagram

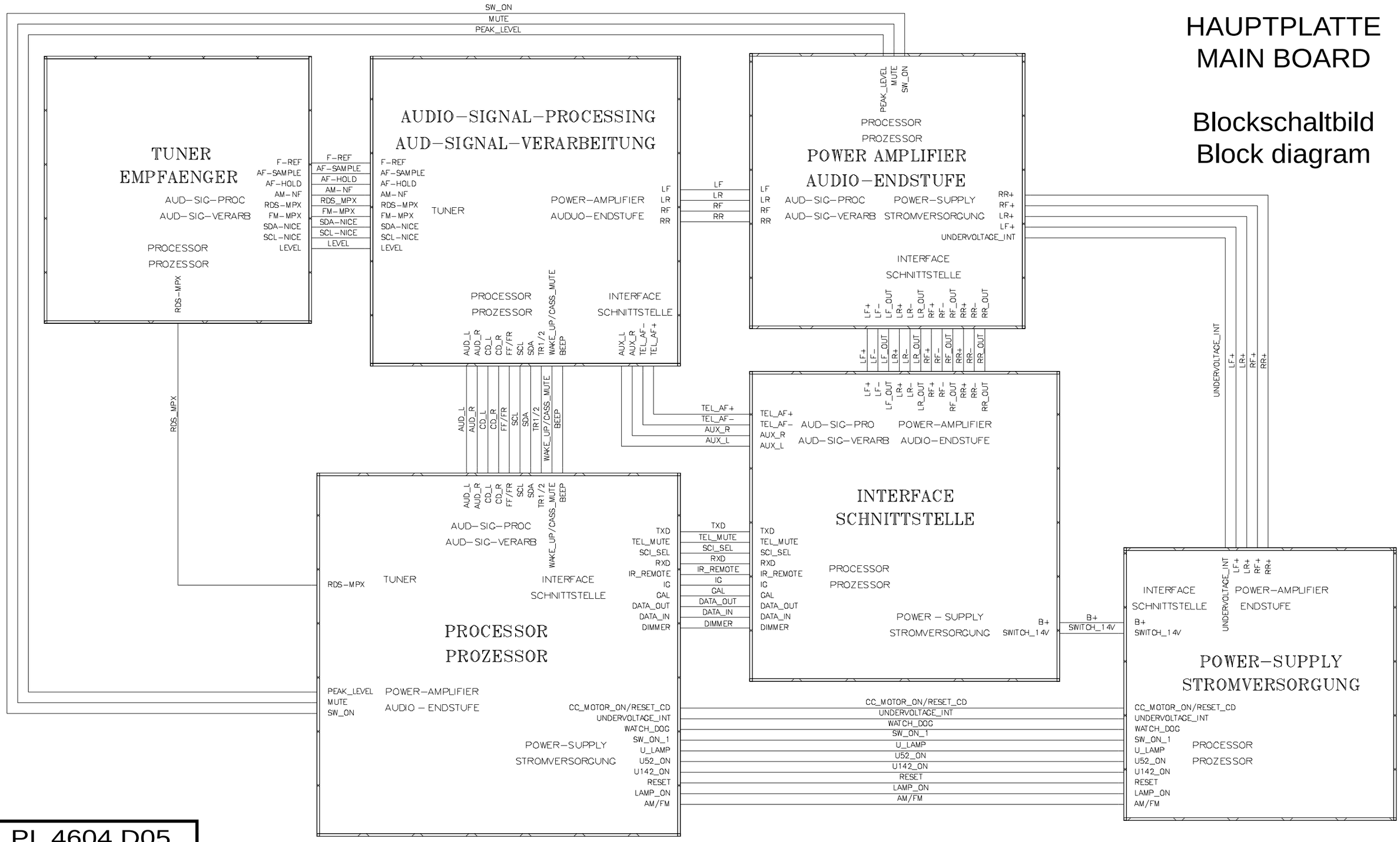

PL 4604 D05

HAUPTPLATTE
MAIN BOARD

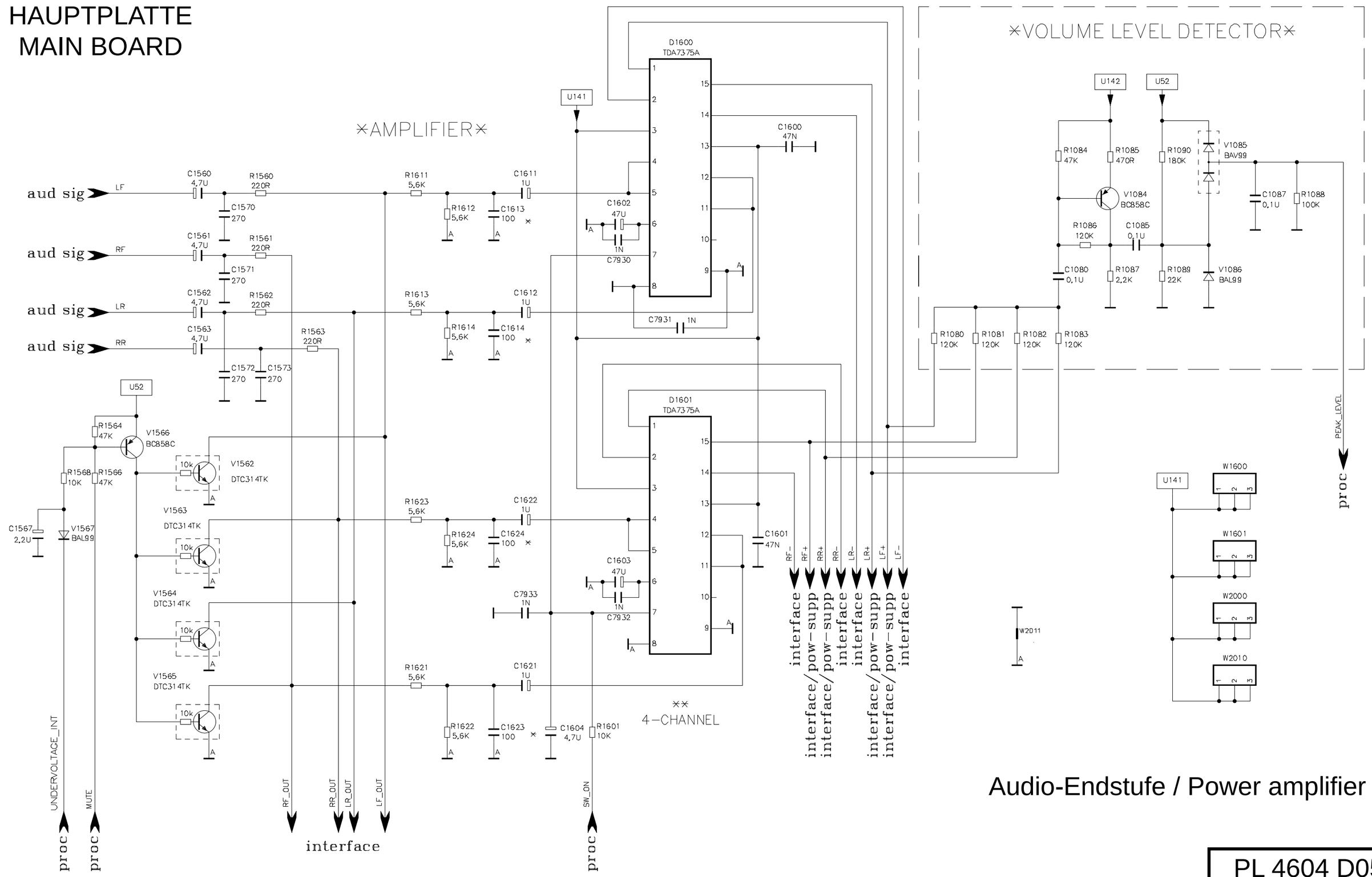

Audio-Endstufe / Power amplifier

PL 4604 D05

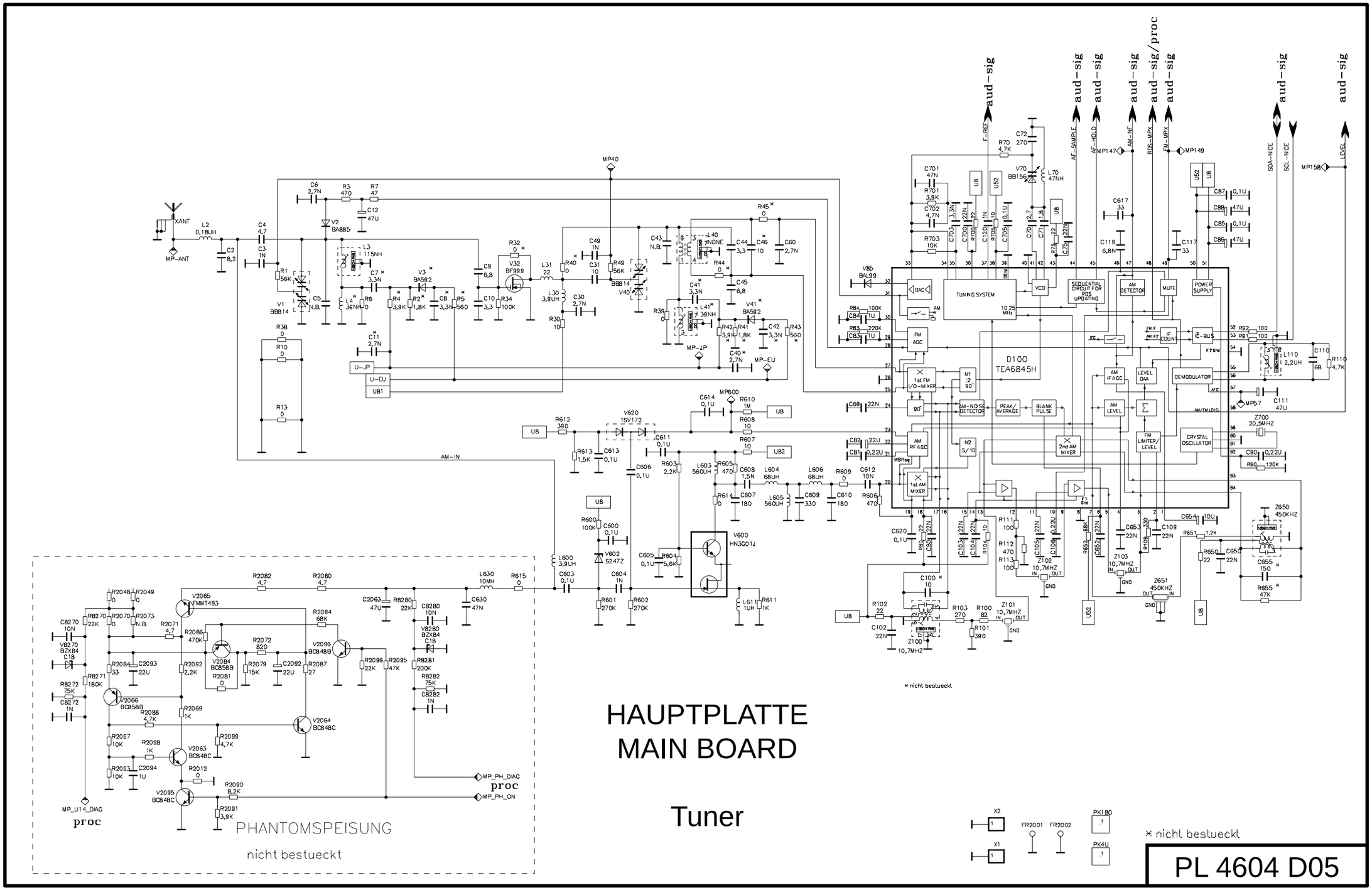
HAUPTPLATTE
MAIN BOARD
Tuner
PHANTOMSPEISUNG
nicht bestueckt
× nicht bestueckt
PL 4604 D05
D100
TEA6845H
TUNING SYSTEM
10.25 MHZ
DAC
FM AGC
1st FM I/O-MIXER
AM-NOISE DETECTOR
PEAK/ AVERAGE
BLANK PULSE
AM RF AGC
1st AM MIXER
2nd AM MIXER
VCO
SEQUENTIAL CIRCUIT FOR R95 UPDATING
AM DETECTOR
MUTE
POWER SUPPLY
AM IF AGC
LEVEL DAA
DEMODULATOR
FM LIMITER/ LEVEL
CRYSTAL OSCILLATOR
IF COUNT
I²C-BUS
aud-sig
aud-sig/proc
SDA-NICE
SCL-NICE
LEVEL
MP-ANT
XANT
MP40
MP-JP
MP-EU
U-JP
U-EU
UB1
AM-IN
MP600
MP57
MP147
MP149
MP158
V620
1SV172
V600
HN3G01J
V602
S247Z
V2065
MMT493
V2066
BC858B
V2084
BC858B
V2063
BC848C
V2064
BC848C
V2095
BC848C
V2096
BC848B
V8280
BZX84
C18
V8270
BZX84
C18
MP_PH_DIAG
MP_PH_ON
MP_U14_DIAG
proc
X2
X1
FR2001
FR2002
PK180
PK4U

HAUPTPLATTE
MAIN BOARD

Audio Signal Verarbeitung / Audio signal processing

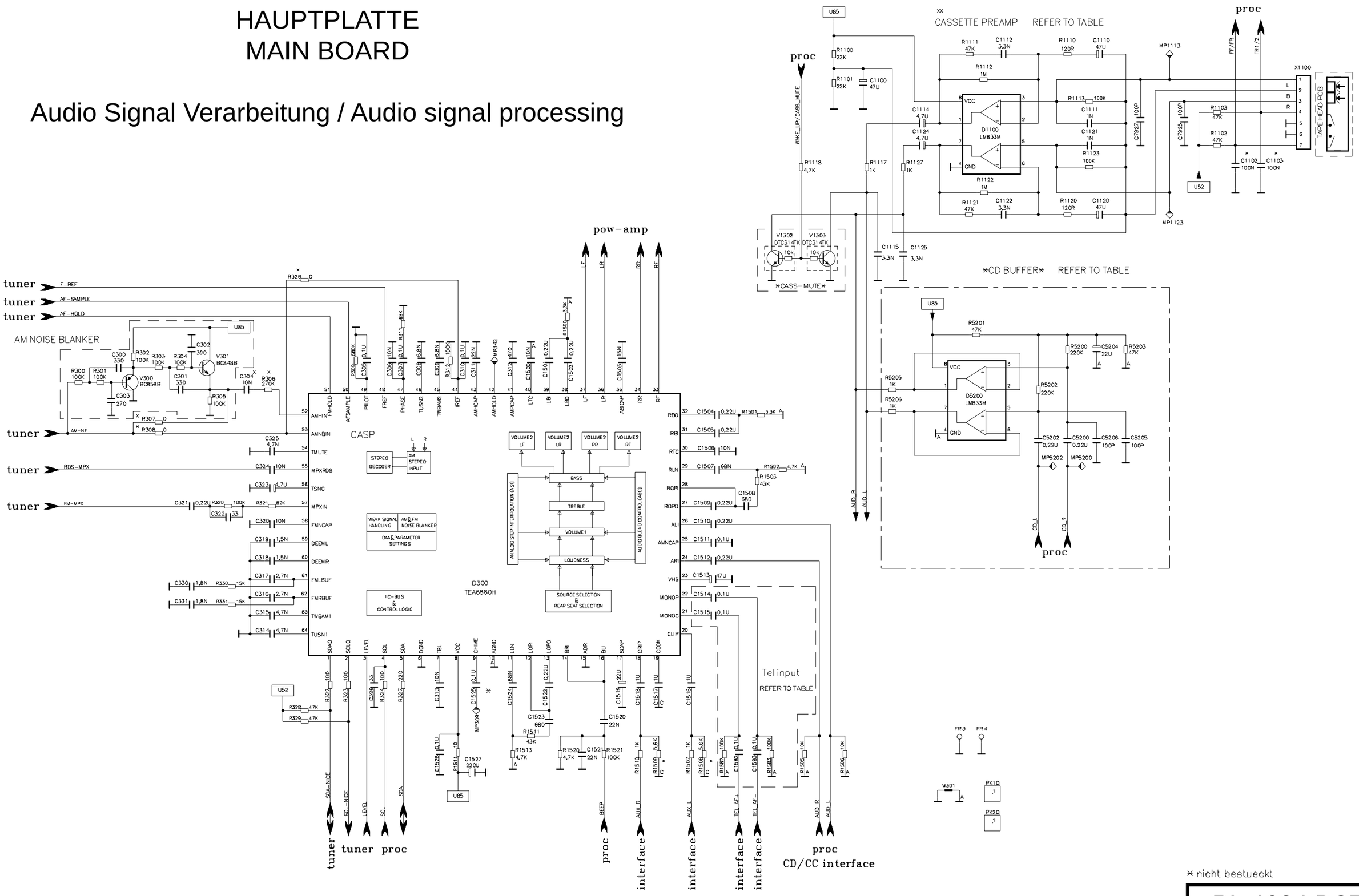

× nicht bestueckt

PL 4604 D05

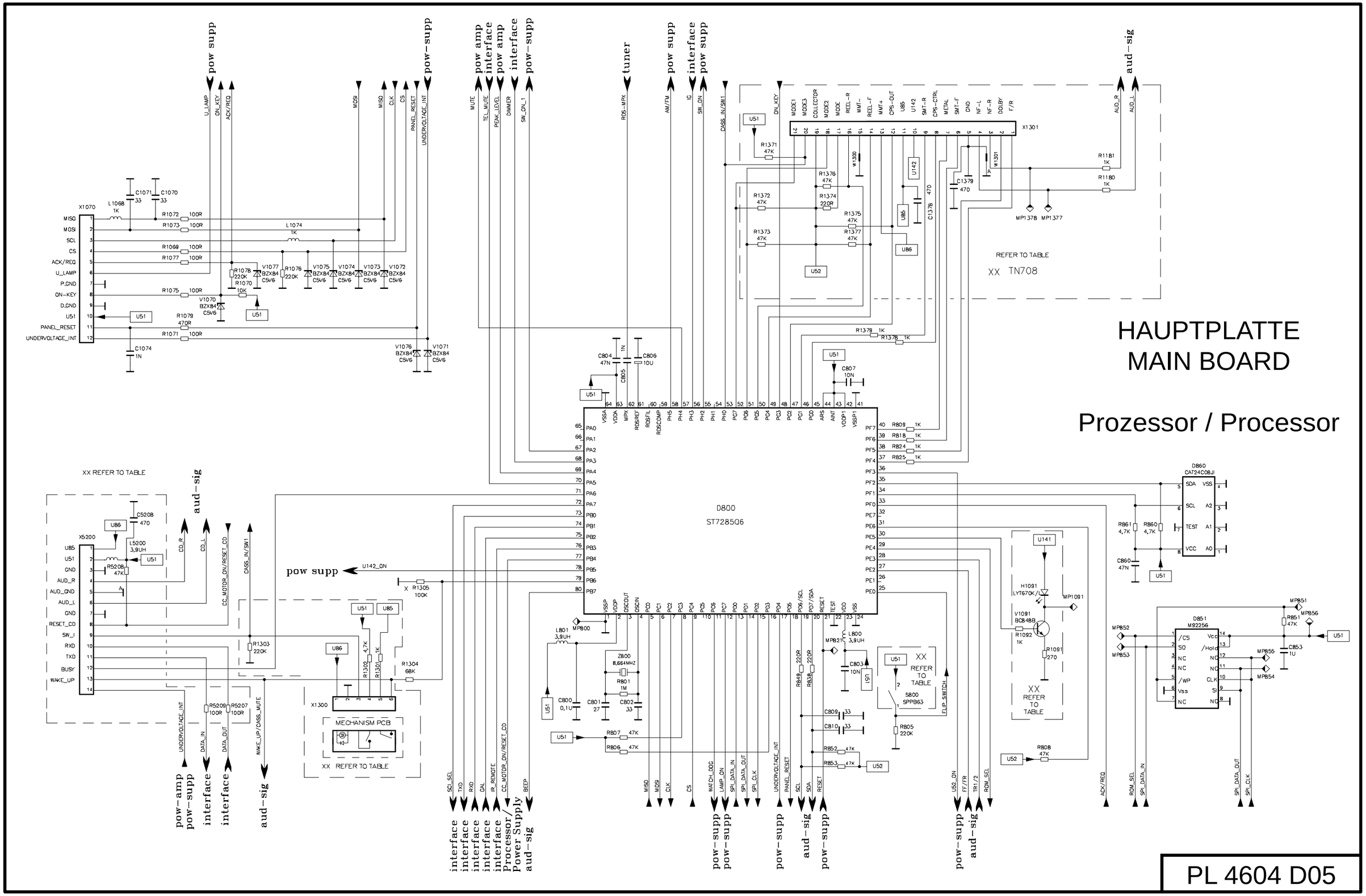
HAUPTPLATTE
MAIN BOARD
Prozessor / Processor
D800
ST72850G6
X1070
X1301
X5200
X1300
D860
CAT24C08JI
D851
M95256
MECHANISM PCB
REFER TO TABLE
XX TN708
XX REFER TO TABLE
PL 4604 D05

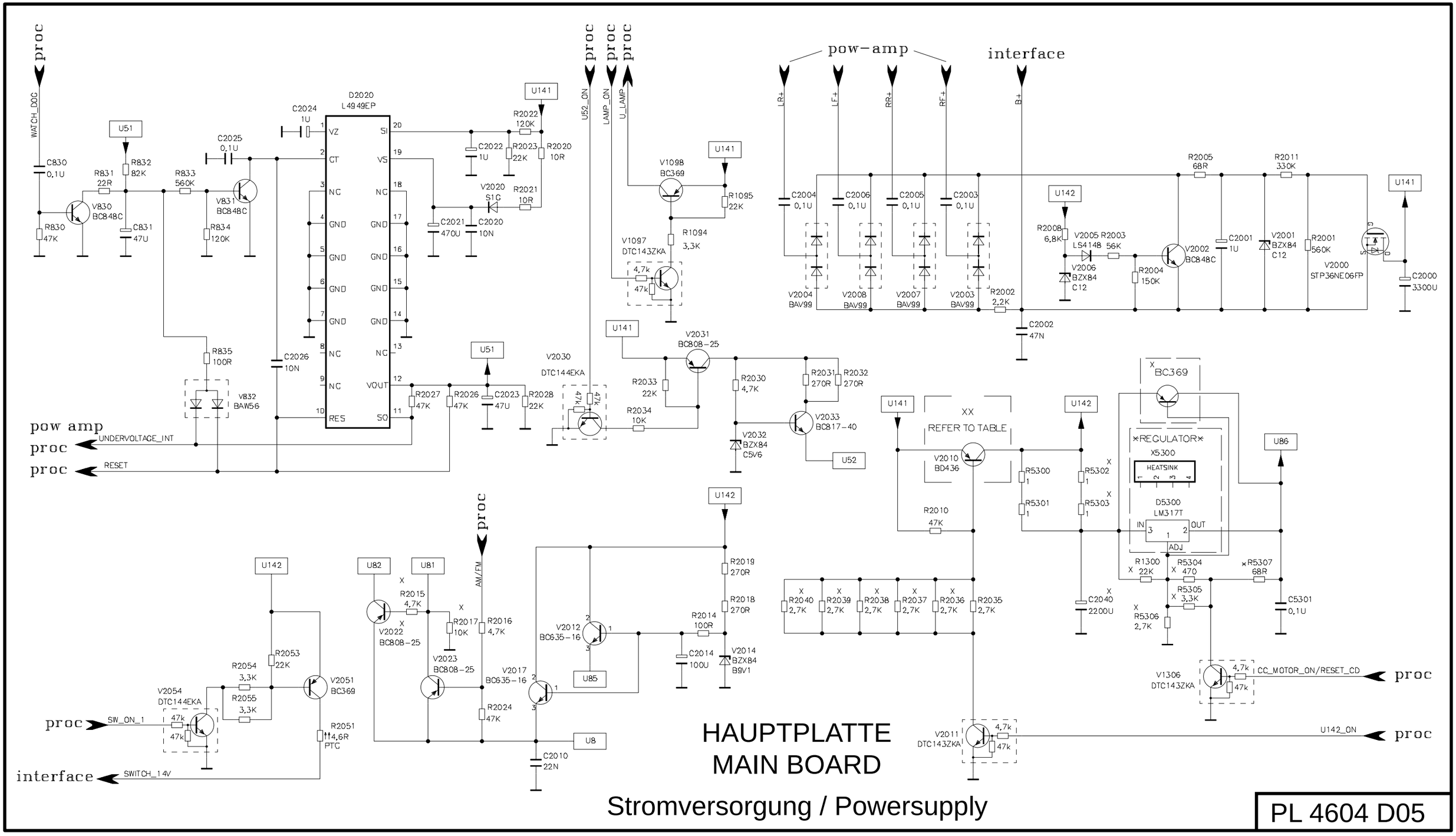
proc
WATCH_DOG
C830 0,1U
R830 47K
R831 22R
V830 BC848C
U51
R832 82K
C831 47U
R833 560K
C2025 0,1U
V831 BC848C
R834 120K
C2024 1U
D2020 L4949EP
VZ
CT
NC
GND
VOUT
RES
SI
VS
SO
U141
R2022 120K
C2022 1U
R2023 22K
R2020 10R
V2020 S1G
R2021 10R
C2021 470U
C2020 10N
R835 100R
V832 BAW56
C2026 10N
R2027 47K
R2026 47K
C2023 47U
R2028 22K
V2030 DTC144EKA
47k
pow amp
UNDERVOLTAGE_INT
RESET
U52_ON
LAMP_ON
U_LAMP
V1098 BC369
R1095 22K
R1094 3,3K
V1097 DTC143ZKA
4,7k
47k
V2031 BC808-25
R2033 22K
R2034 10K
R2030 4,7K
V2032 BZX84 C5V6
R2031 270R
R2032 270R
V2033 BC817-40
U52
pow-amp
interface
LR+
LF+
RR+
RF+
B+
C2004 0,1U
C2006 0,1U
C2005 0,1U
C2003 0,1U
V2004 BAV99
V2008 BAV99
V2007 BAV99
V2003 BAV99
R2002 2,2K
C2002 47N
U142
R2008 6,8K
V2005 LS4148
R2003 56K
V2006 BZX84 C12
R2004 150K
V2002 BC848C
R2005 68R
C2001 1U
R2011 330K
V2001 BZX84 C12
R2001 560K
V2000 STP36NE06FP
C2000 3300U
X BC369
XX REFER TO TABLE
V2010 BD436
R2010 47K
R5300 1
R5301 1
R5302 1
R5303 1
×REGULATOR×
X5300
HEATSINK
D5300 LM317T
IN
OUT
ADJ
U86
R1300 22K
R5304 470
×R5307 68R
R5305 3,3K
R5306 2,7K
C2040 2200U
C5301 0,1U
R2040 2,7K
R2039 2,7K
R2038 2,7K
R2037 2,7K
R2036 2,7K
R2035 2,7K
V1306 DTC143ZKA
CC_MOTOR_ON/RESET_CD
V2011 DTC143ZKA
U142_ON
AM/FM
U82
U81
R2015 4,7K
V2022 BC808-25
R2017 10K
V2023 BC808-25
R2016 4,7K
R2024 47K
V2017 BC635-16
V2012 BC635-16
U85
R2019 270R
R2018 270R
R2014 100R
C2014 100U
V2014 BZX84 B9V1
U8
C2010 22N
R2053 22K
R2054 3,3K
R2055 3,3K
V2051 BC369
V2054 DTC144EKA
SW_ON_1
R2051 4,6R PTC
SWITCH_14V
HAUPTPLATTE
MAIN BOARD
Stromversorgung / Powersupply
PL 4604 D05

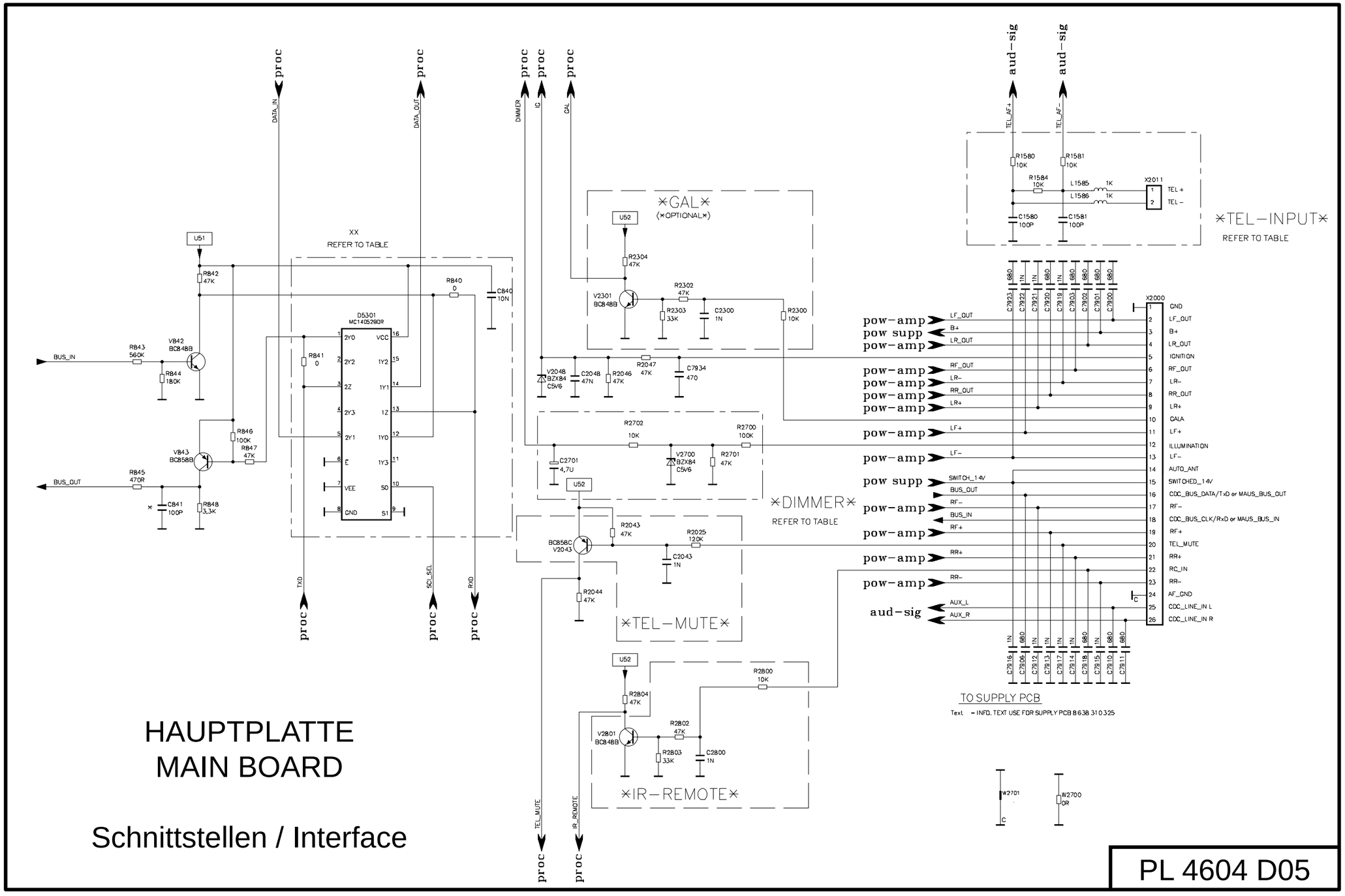

HAUPTPLATTE
MAIN BOARD

Schnittstellen / Interface

PL 4604 D05

REMARK : * = "Section/Component In Use"

	T-LINE 2								FUNLINE III			
	Cleveland DJ31 Dresden C31	Boston / Dublin C31 Madison DJ31	Freiburg C31 Las Vegas DJ31	Canberra C31 San Diego DJ31	Essen CD31	Alicante CD31 Lausanne CD31	Konstanz CD31	San Remo CD31 Santa Cruz CD31	Düsseldorf C51 Kansas DJ51	Bologna C51 Hawaii DJ51 Maryland DJ51	München CD51	Modena CD51
AM		X		X		X		X		X		X
CASSETTE PREAMP	X	X										
CASS-MUTE	X	X										
TN708 INTERFACE			X	X					X	X		
CD BUFFER					X	X	X	X			X	X
S800									X	X	X	X
H1091,R1091 & V1091									X	X	X	X
DIMMER									X	X	X	X
D5300	BC369	BC369	BC369	BC369	LM317T	LM317T	LM317T	LM317T	BC369	BC369	LM317T	LM317T
V2010	BC369	BC369	BC369	BC369	BD436	BD436	BD436	BD436	BC369	BC369	BD436	BD436
TEL input			X	X			X	X	X	X	X	X
R5302/R5303					X	X	X	X			X	X
R1300	X	X	X	X					X	X		
R5304	3,3K	3,3K	3,3K	3,3K	470R	470R	470R	470R	3,3K	3,3K	470R	470R
R5305	3,3K	3,3K	3,3K	3,3K					3,3K	3,3K		
R5306					X	X	X	X			X	X
R5307					X	X	X	X			X	X
R1304	68K	68K	68K	68K	10R	10R	10R	10R	68K	68K	10R	10R
R1305	X	X	X	X					X	X		
R1301/R1302/R1303	X	X										
X1300	X	X										
R5207/5208/5209					X	X	X	X			X	X
L5200/X5200					X	X	X	X			X	X
C304/R306/R307/R326		X		X		X		X		X		X
D5301/C840					X	X	X	X			X	X
R840/R841	X	X	X	X					X	X		
C2040	47uF	47uF	47uF	47uF	2200uF	2200uF	2200uF	2200uF	47uF	47uF	2200uF	2200uF
R1505/R1506	OPEN	OPEN	10K	10K	10K	10K	10K	10K	10K	10K	10K	10K
R2036..... R2040					X	X	X	X			X	X
R2015/R2017/V2022		X		X		X		X		X		X

RAW MAIN PCB 8 638 214 604

MODEL	PART NUMBER	PRODUCT CODE	COMPONENT USED TO INDICATE VARIOUS MODEL
T2 CD15(D) =	8 638 204 601	(7 641 171 310)	R3200 0
T2 CD 15(E) =	8 638 204 602	(7 641 172 310)	R3201 0
T2 CC 20(D) =	8 638 204 597	(7 641 115 510)	R3202 0
T2 CC 20(E) =	8 638 204 598	(7 641 120 510)	R3203 0
T2 CD 20(D) =	8 638 204 603	(7 641 155 310)	R3204 0
T2 CD 20(E) =	8 638 204 604	(7 641 160 310)	R3205 0
T2 CC 30(D) =	8 638 204 599	(7 641 140 510)	R3206 0
T2 CC 30(E) =	8 638 204 600	(7 641 145 510)	R3207 0
F3 CC 20(D) =	8 638 204 582	(7 641 205 310)	
F3 CC 20(E) =	8 638 204 583	(7 641 210 310)	
F3 CC 20(D) =	8 638 204 585	(7 641 255 310)	
F3 CC 20(E) =	8 638 204 586	(7 641 260 310)	

COMMON TEST JIG FOR
PCB8638213269 & PCB8638213259

MP1 MP375 MP376 MP1111 MP1121 GP1 GP2 GP3

DUMMY TEST PAD

PK10 PK20 PK30 PK40 PK50 PK60
PK150 PK160 PK170U PK180
PK1U PK2U PK3U PK1
PK15U PK16U PK17U PK18U

HAUPTPLATTE
MAIN BOARD

Blockschaltbild
Block diagram

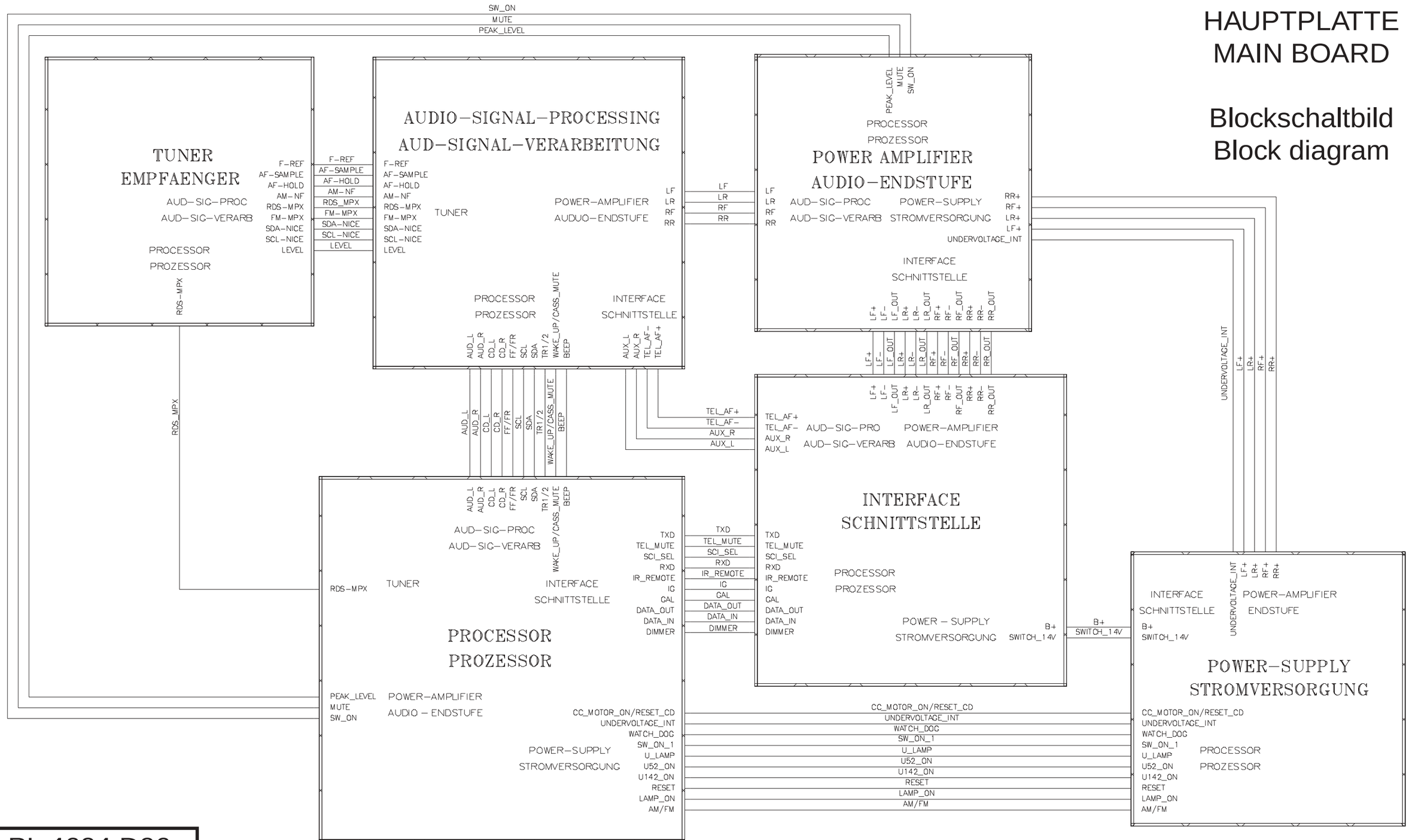

PL 4604 D06

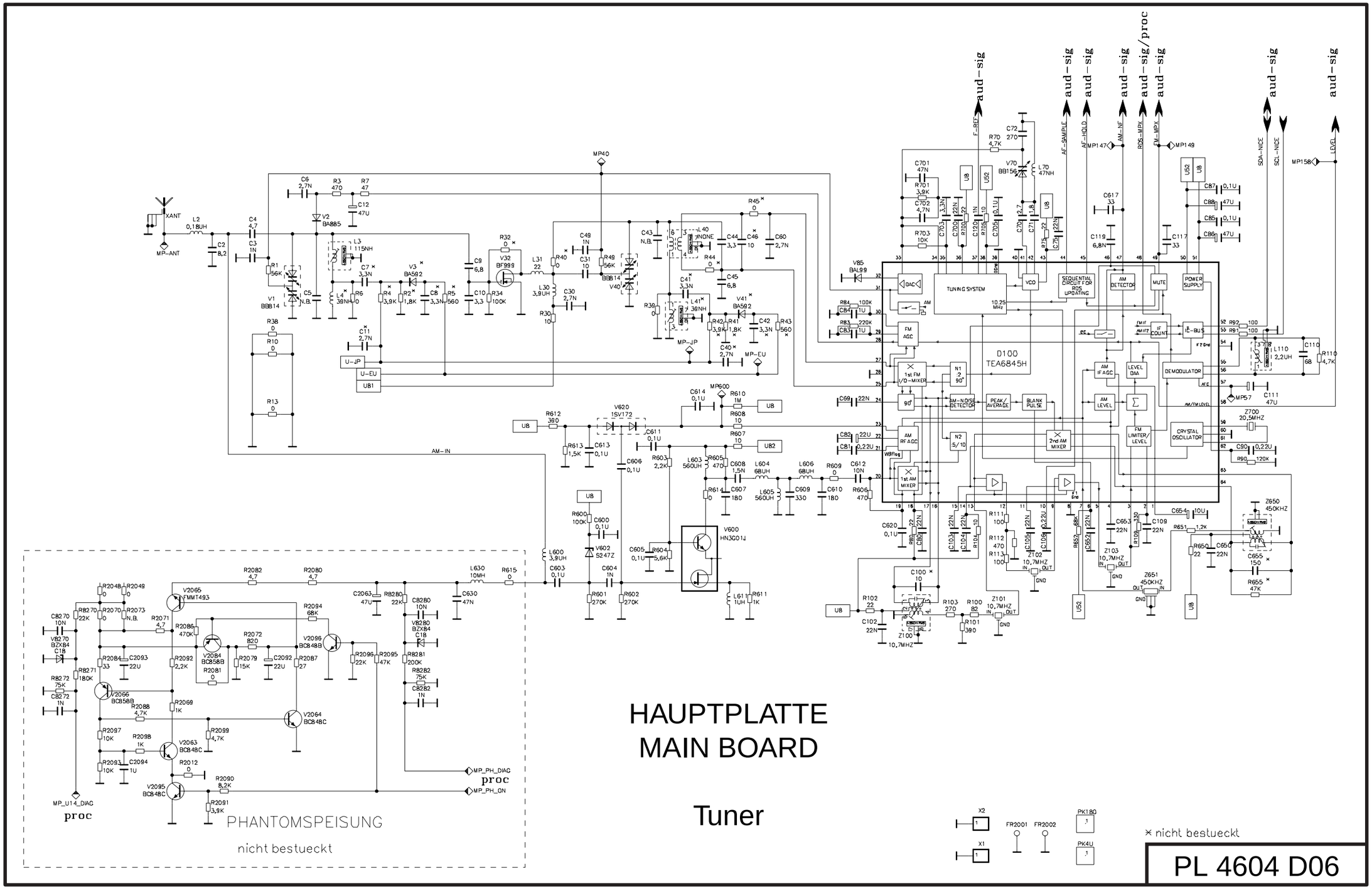
HAUPTPLATTE
MAIN BOARD
Tuner
PHANTOMSPEISUNG
nicht bestueckt
D100
TEA6845H
TUNING SYSTEM
SEQUENTIAL CIRCUIT FOR RDS UPDATING
AM DETECTOR
MUTE
POWER SUPPLY
DEMODULATOR
CRYSTAL OSCILLATOR
FM LIMITER/ LEVEL
2nd AM MIXER
1st AM MIXER
AM RF AGC
FM AGC
1st FM I/Q-MIXER
AM-NOISE DETECTOR
PEAK/ AVERAGE
BLANK PULSE
AM IF AGC
AM LEVEL
LEVEL DAA
IF COUNT
I²C-BUS
DAC
VCO
aud-sig
aud-sig/proc
F-RFE
AF-SAMPLE
AF-HOLD
AM-NF
RDS-MPX
FM-MPX
SDA-NCE
SCL-NCE
LEVEL
AM-IN
MP-ANT
XANT
MP40
MP-JP
MP-EU
U-JP
U-EU
UB1
MP600
MP57
MP149
MP147
MP158
MP_PH_DIAG
MP_PH_ON
MP_U14_DIAG
proc
X2
X1
FR2001
FR2002
PK180
PK4U
× nicht bestueckt
PL 4604 D06

HAUPTPLATTE
MAIN BOARD

Audio Signal Verarbeitung / Audio signal processing

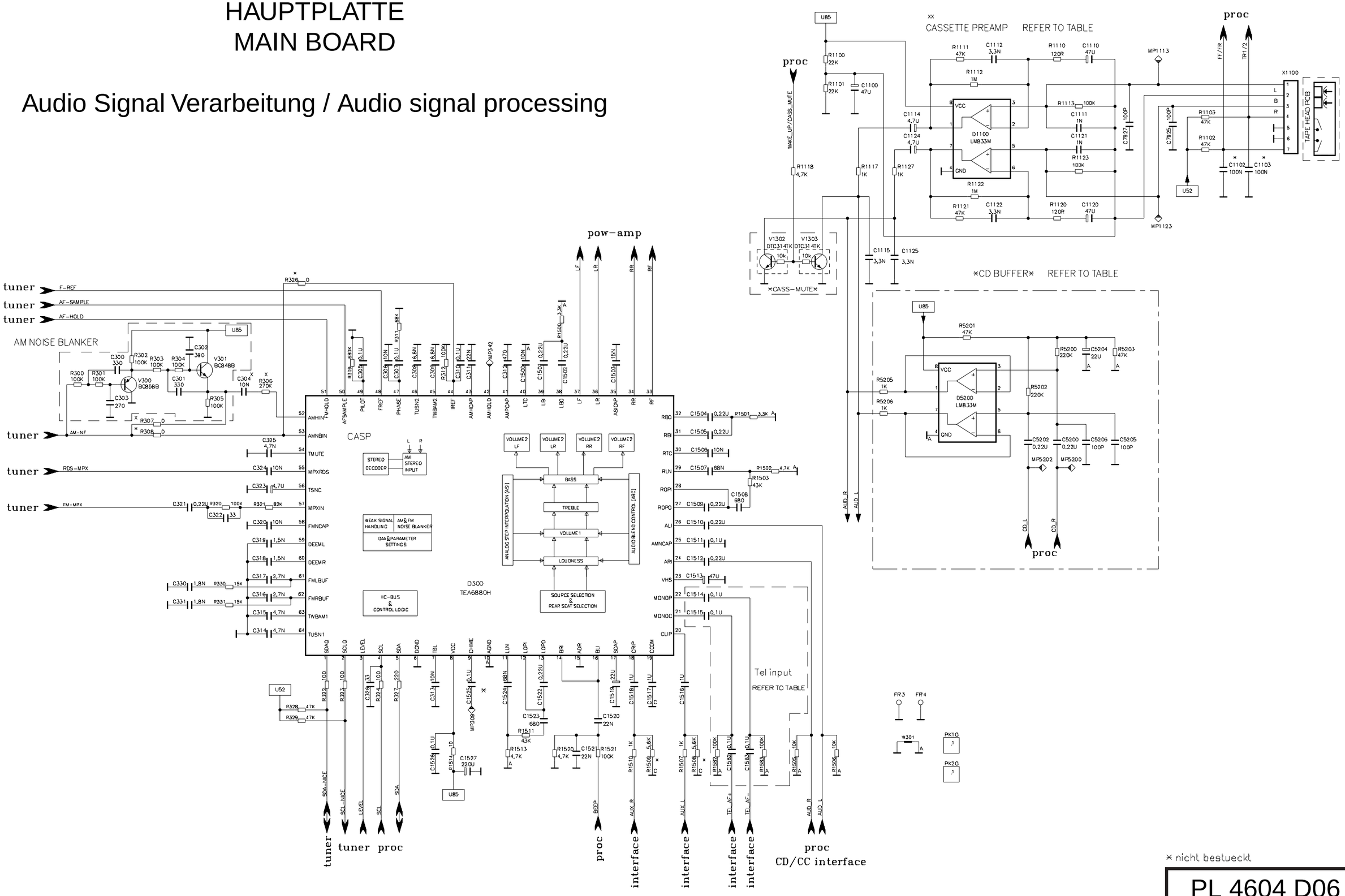

PL 4604 D06

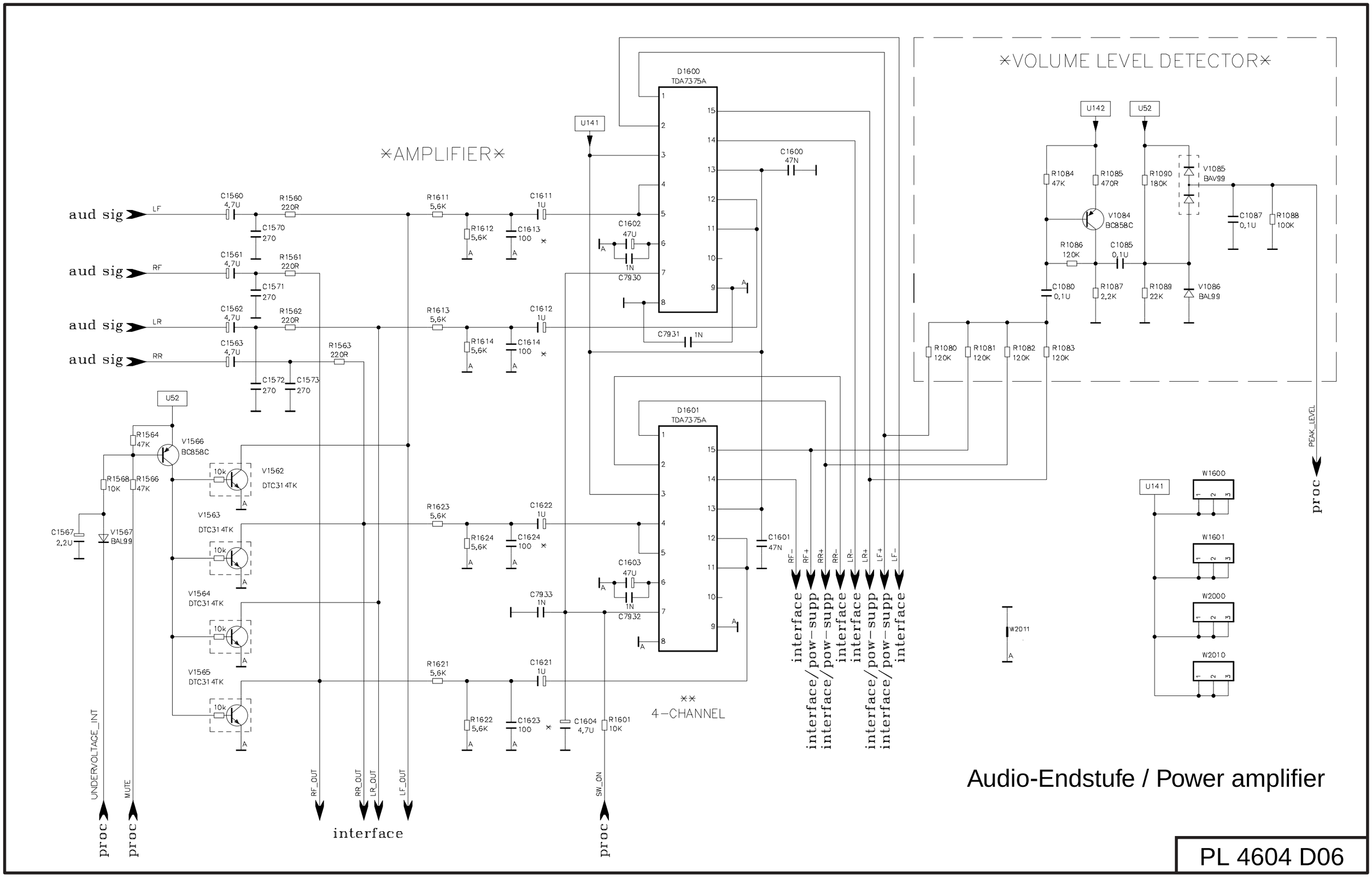

Audio-Endstufe / Power amplifier

PL 4604 D06

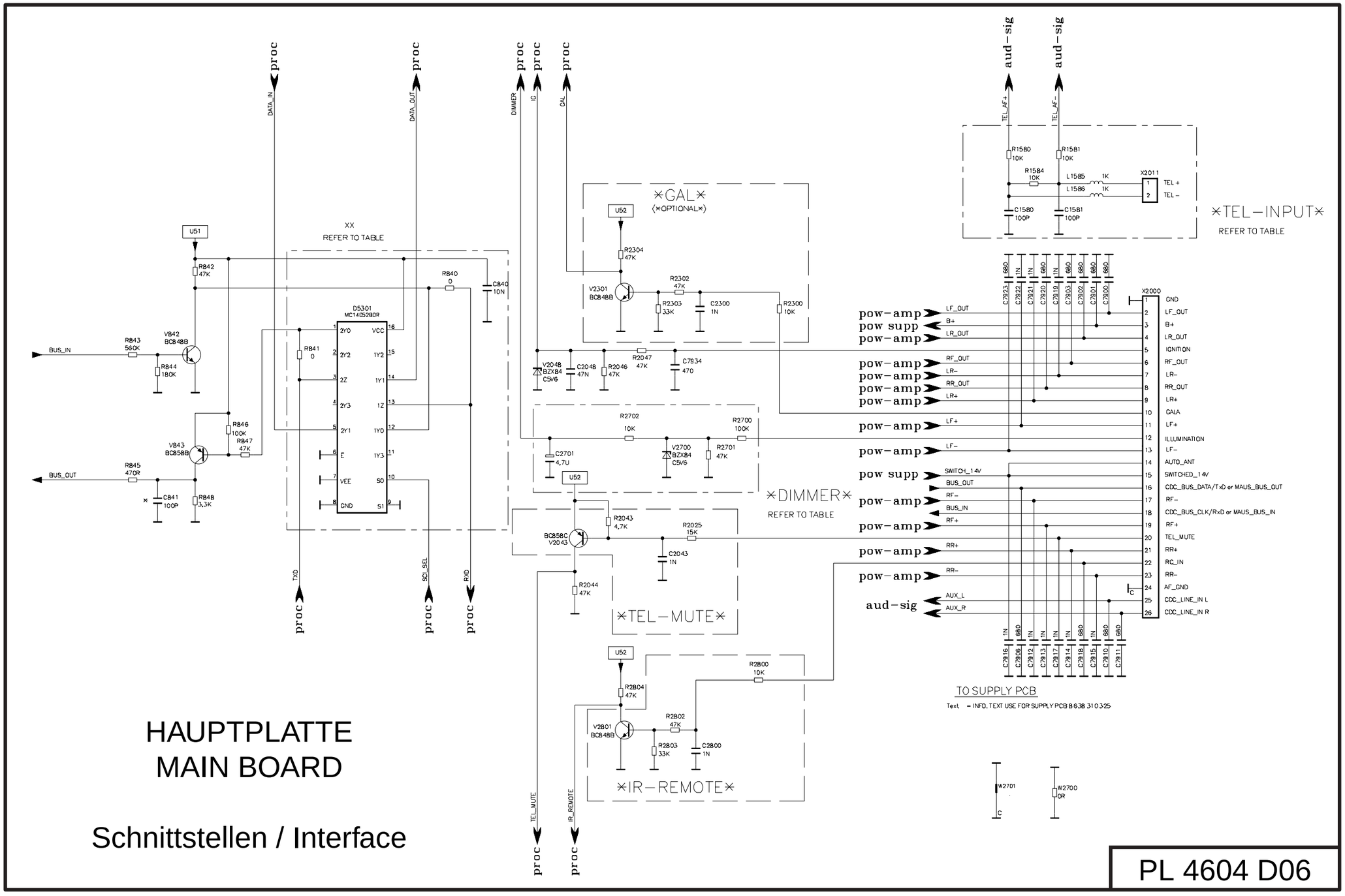

HAUPTPLATTE
MAIN BOARD

Schnittstellen / Interface

PL 4604 D06

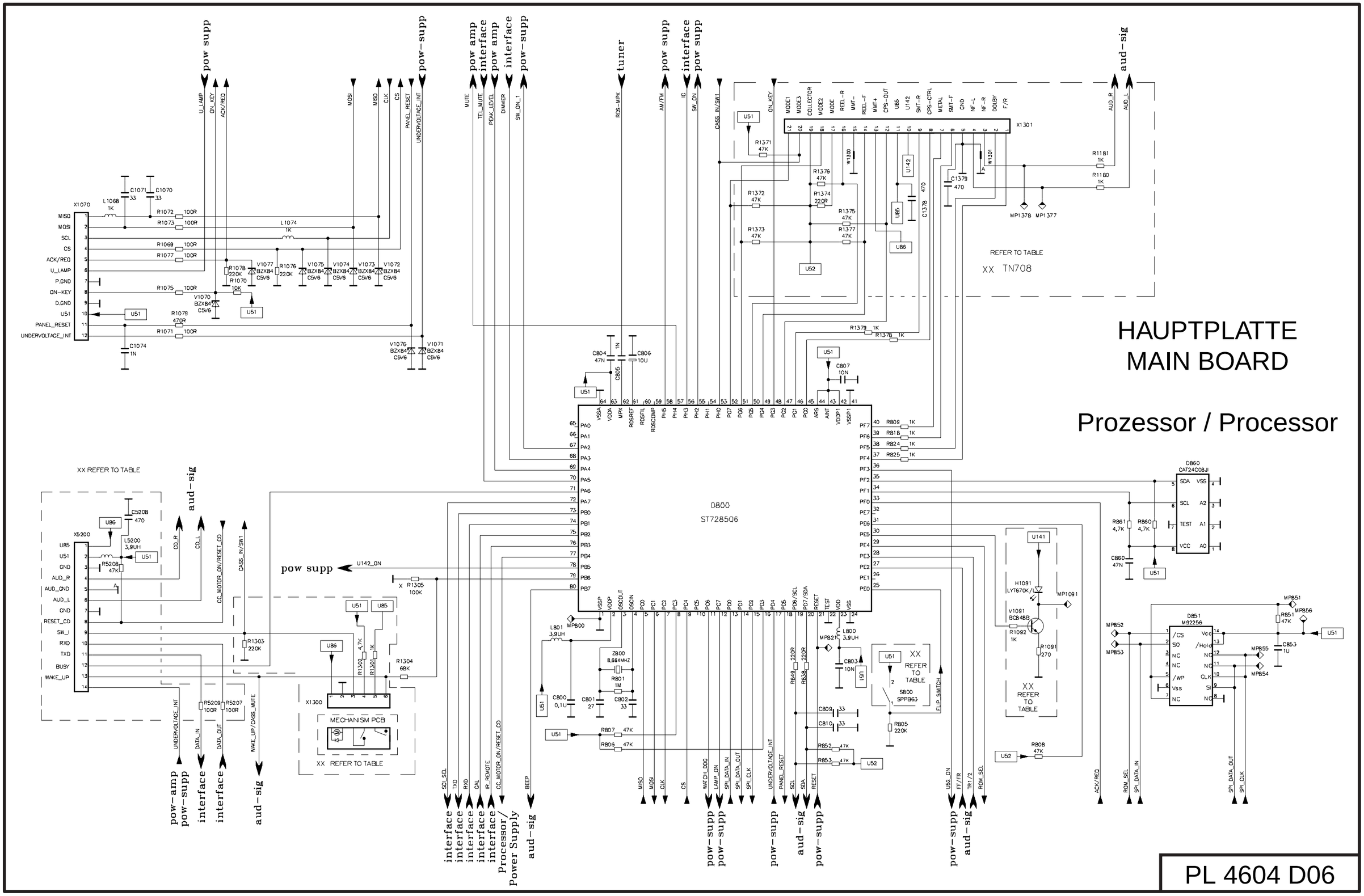
HAUPTPLATTE
MAIN BOARD
Prozessor / Processor
D800
ST7285Q6
X1070
X1301
X5200
X1300
D860
CAT24C08JI
D851
M92256
REFER TO TABLE
XX TN708
XX REFER TO TABLE
MECHANISM PCB
pow supp
pow amp
interface
pow-supp
tuner
aud-sig
Processor/
Power Supply

PL 4604 D06

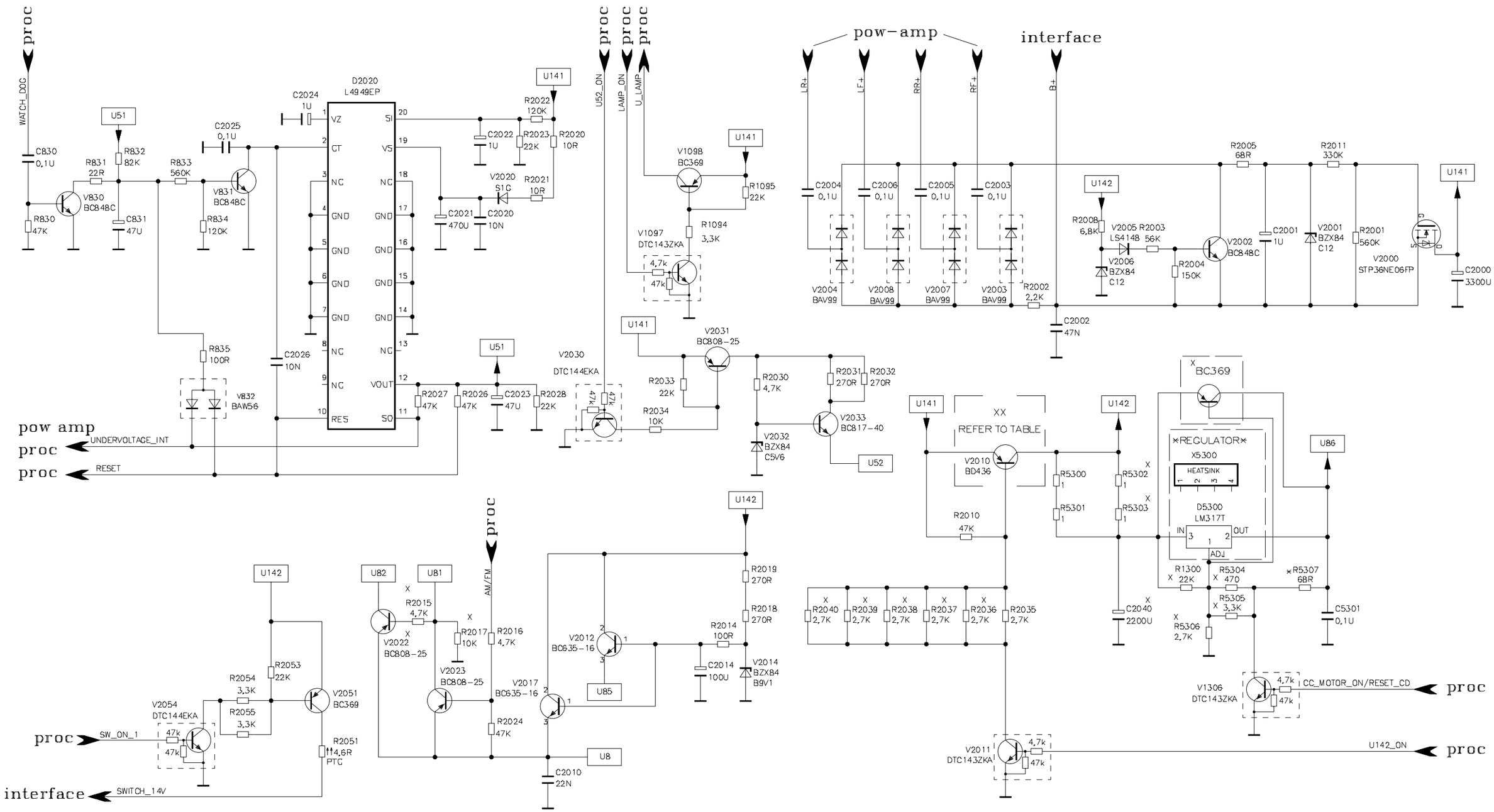

Stromversorgung / Powersupply

PL 4604 D06

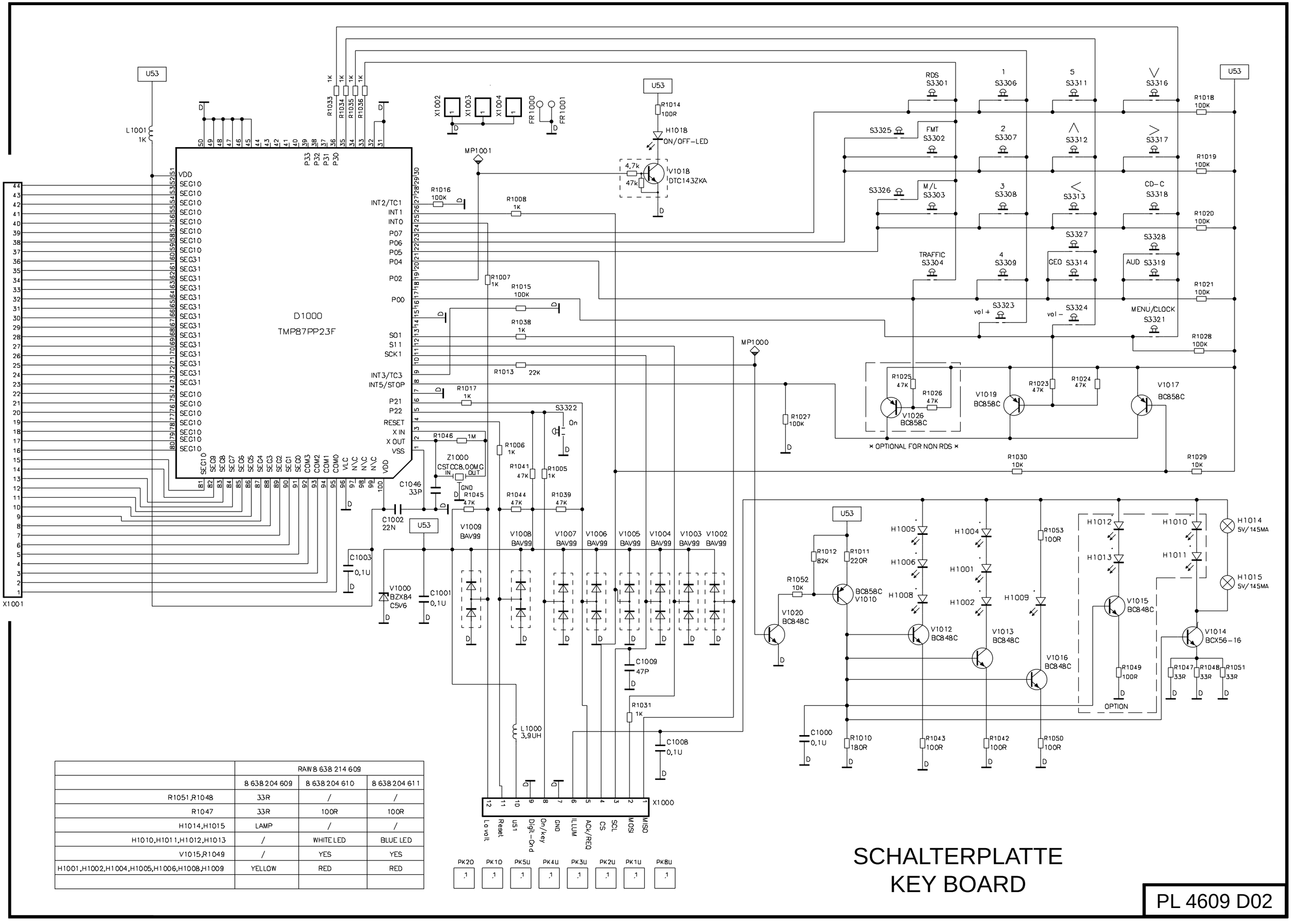

	RAW 8 638 214 609		
	8 638 204 609	8 638 204 610	8 638 204 611
R1051,R1048	33R	/	/
R1047	33R	100R	100R
H1014,H1015	LAMP	/	/
H1010,H1011,H1012,H1013	/	WHITE LED	BLUE LED
V1015,R1049	/	YES	YES
H1001,H1002,H1004,H1005,H1006,H1008,H1009	YELLOW	RED	RED

SCHALTERPLATTE
KEY BOARD

PL 4609 D02

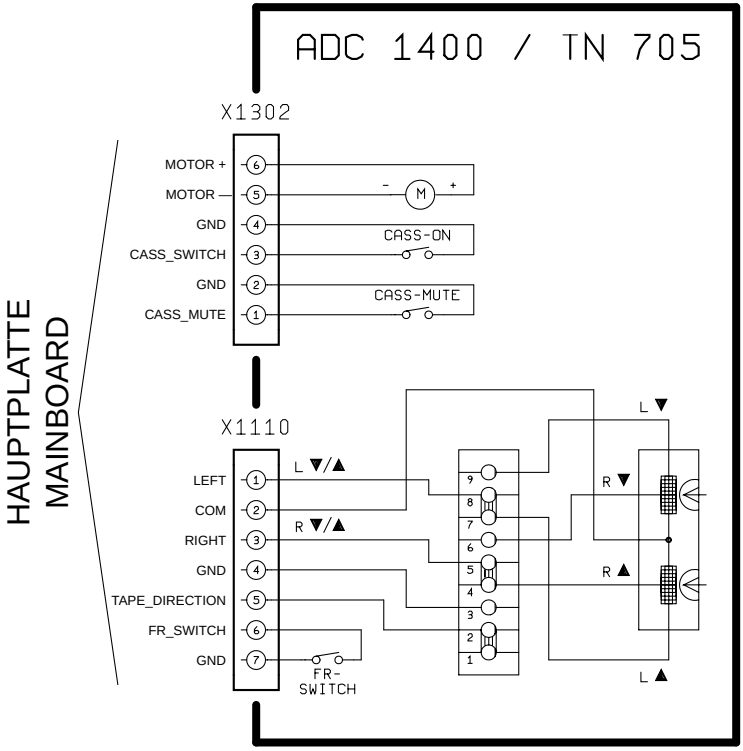
ADC 1400 / TN 705
X1302
MOTOR +
MOTOR —
GND
CASS_SWITCH
GND
CASS_MUTE
M
CASS-ON
CASS-MUTE
HAUPTPLATTE
MAINBOARD
X1110
LEFT
COM
RIGHT
GND
TAPE_DIRECTION
FR_SWITCH
GND
L ▼/▲
R ▼/▲
FR-
SWITCH
L ▼
R ▼
R ▲
L ▲

ANSCHLUSSPLATTE
CONNECTOR BOARD

(TO X2000) X2001

Pin	Signal
1	GND
2	LF_OUT
3	B+
4	LR_OUT
5	IGNITION
6	RF_OUT
7	–LR
8	RR_OUT
9	+LR
10	GALA
11	+LF
12	ILLUMINATION
13	–LF
14	AUTO_ANT
15	14V_SWITCHED
16	CDC_BUS_DATA/TXD or MAUS_BUS_OUT
17	–RF
18	CDC_BUS_CLK/RXD or MAUS_BUS_IN
19	+RF
20	TEL_MUTE
21	+RR
22	RC_IN
23	–RR
24	AF_GND
25	CDC_LINE_IN L
26	CDC_LINE_IN R

ZUR HAUPTPLATTE
TO MAIN–PCB

F2000 10A

MPMB_OUT

MPMB_IN

X2050 (A, III)

Pin	Signal
8	GND
7	IGNITION
6	ILLUMINATION
5	AUTO_ANT
4	PERMANENT PLUS
3	N/C
2	TELEPHONE–MUTE
1	GALA

X2040 (B, II)

Pin	Signal
1	+RR
2	–RR
3	+RF
4	–RF
5	+LF
6	–LF
7	+LR
8	–LR

X2030 (C–1, I–1; C–2, I–2; C–3, I–3)

Pin	Signal
1	LINE–OUT LR
2	LINE–OUT RR
3	LINE–OUT GND
4	LINE–OUT LF
5	LINE–OUT RF
6	14V–SWITCHED
7	N/C
8	N/C
9	N/C
10	14V–SWITCHED
11	REMOTE CONTROL–IN
12	REMOTE CONTROL–GND
13	CDC DATA–IN
14	CDC DATA–OUT
15	CDC B+
16	14V–SWITCHED
17	CDC DATA–GND
18	CDC AF–GND/AUX1–GND
19	CDC AF–L/AUX1 AF–L
20	CDC AF–R/AUX1 AF–R

PL 3275 D01
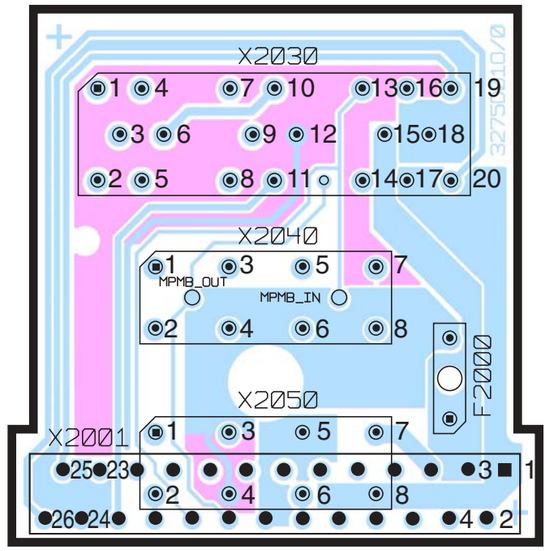
Anschlußplatte
Connector board
PL 3275 D01