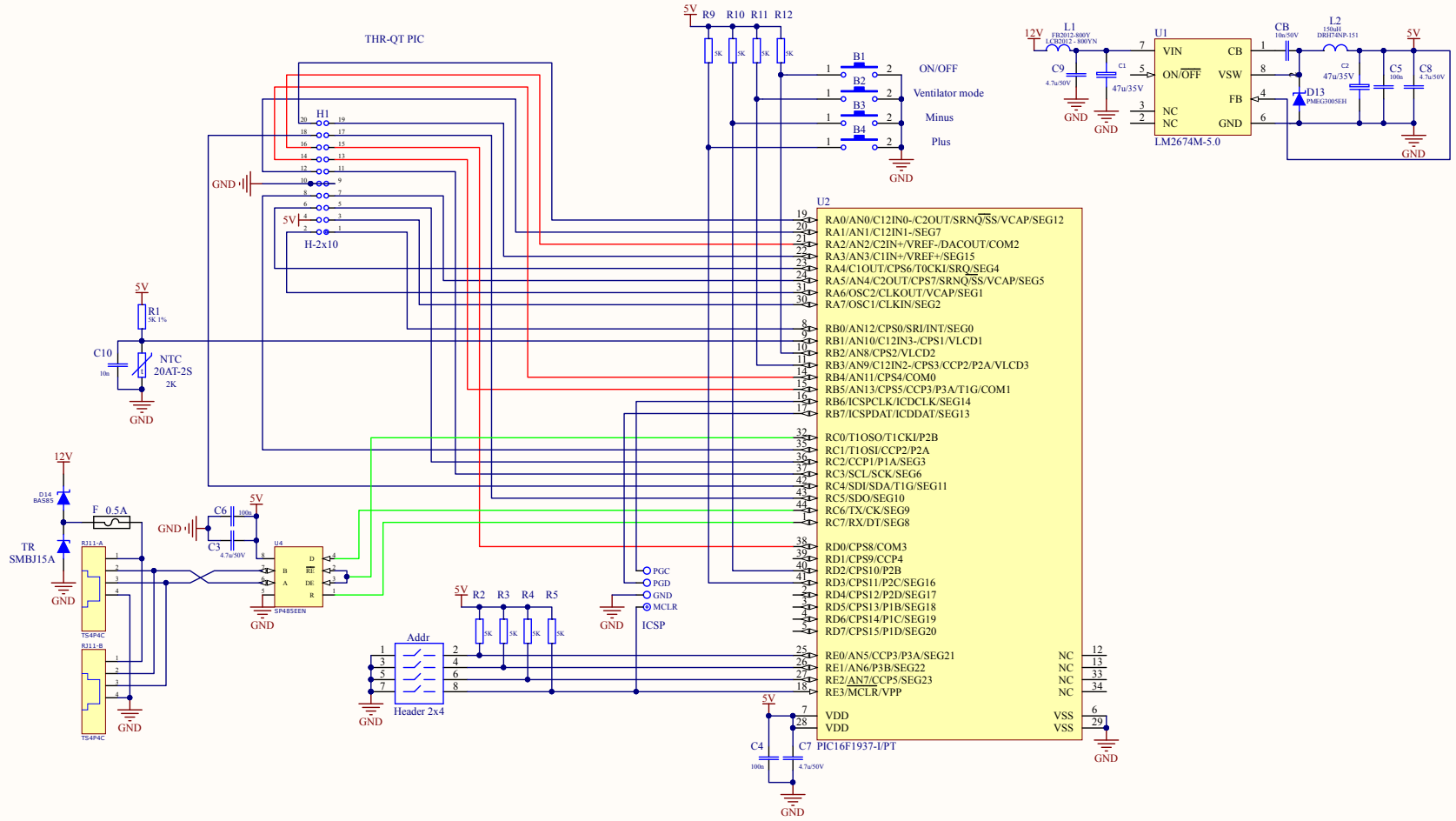

Title		
Size B	Number	Revision
Date: 21/06/2015		Sheet of
File: E:\Rhombus\..\THR-QT PIC.SchDoc		Drawn By: