PCF85176

40 x 4 universal LCD driver for low multiplex rates

Rev. 5 — 6 January 2015 Product data sheet

1. General description

The PCF85176 is a peripheral device which interfaces to almost any Liquid Crystal Display (LCD)[1] with low multiplex rates. It generates the drive signals for any static or multiplexed LCD containing up to four backplanes and up to 40 segments. It can be easily cascaded for larger LCD applications. The PCF85176 is compatible with most microcontrollers and communicates via the two-line bidirectional I^2C-bus. Communication overheads are minimized by a display RAM with auto-incremented addressing, by hardware subaddressing, and by display memory switching (static and duplex drive modes).

For a selection of NXP LCD segment drivers, see Table 24 on page 49.

2. Features and benefits

- Single chip LCD controller and driver
- Selectable backplane drive configuration: static, 2, 3, or 4 backplane multiplexing
- Selectable display bias configuration: static, $\frac{1}{2}$, or $\frac{1}{3}$
- Internal LCD bias generation with voltage-follower buffers
- 40 segment drives:
  - Up to 20 7-segment numeric characters
  - Up to 10 14-segment alphanumeric characters
  - Any graphics of up to 160 segments/elements
- 40 × 4-bit RAM for display data storage
- Auto-incremented display data loading across device subaddress boundaries
- Display memory bank switching in static and duplex drive modes
- Versatile blinking modes
- Independent supplies possible for LCD and logic voltages
- Wide power supply range: from 1.8 V to 5.5 V
- Wide logic LCD supply range:
  - From 2.5 V for low-threshold LCDs
  - Up to 6.5 V for guest-host LCDs and high-threshold twisted nematic LCDs
- Low power consumption
- 400 kHz I^2C-bus interface
- May be cascaded for large LCD applications (up to 2560 segments/elements possible)
- No external components required
- Manufactured in silicon gate CMOS process

1. The definition of the abbreviations and acronyms used in this data sheet can be found in Section 21.

3. Ordering information

Table 1. Ordering information

Type number	Package		
	Name	Description	Version
PCF85176H	TQFP64	plastic thin quad flat package, 64 leads; body 10 × 10 × 1.0 mm	SOT357-1
PCF85176T	TSSOP56	plastic thin shrink small outline package, 56 leads; body width 6.1 mm	SOT364-1

3.1 Ordering options

Table 2. Ordering options

Product type number	Sales item (12NC)	Orderable part number	IC revision	Delivery form
PCF85176H/1	935290063518	PCF85176H/1,518	1	tape and reel, 13 inch, dry pack
PCF85176T/1	935290075118	PCF85176T/1,118	1	tape and reel, 13 inch

4. Marking

Table 3. Marking codes

Product type number	Marking code
PCF85176H/1	PCF85176H
PCF85176T/1	PCF85176T

All information provided in this document is subject to legal disclaimers.

© NXP Semiconductors N.V. 2015. All rights reserved.

5. Block diagram

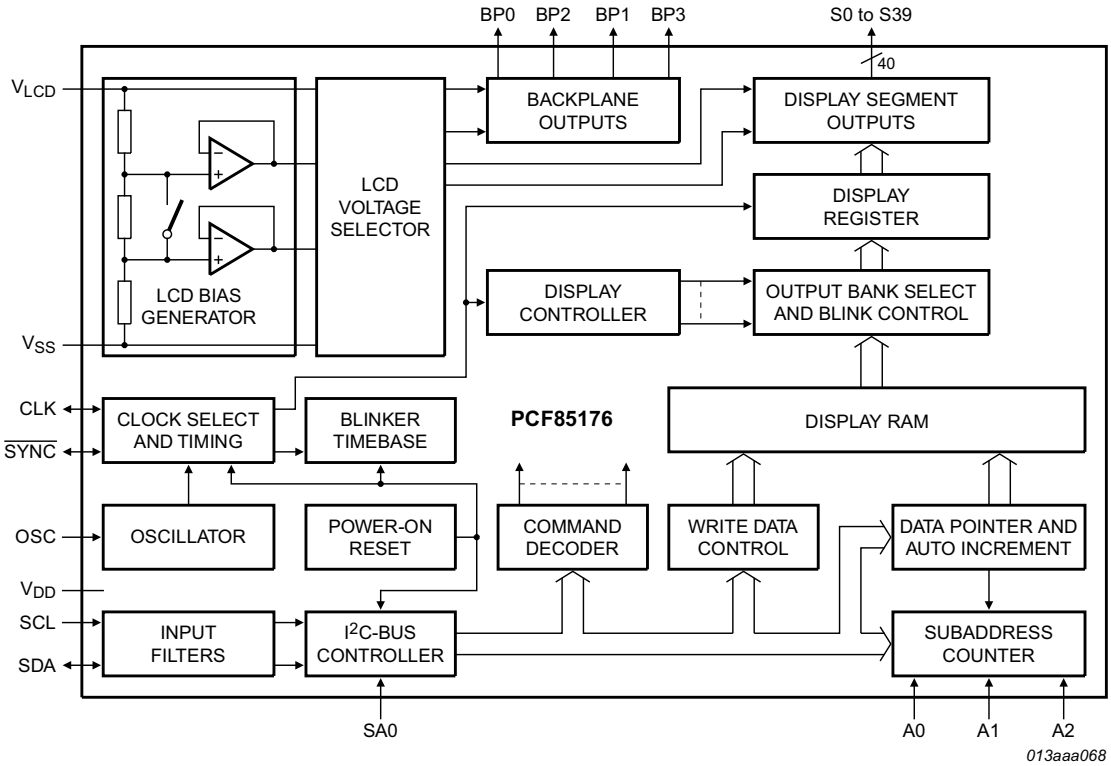

Fig 1. Block diagram of PCF85176

All information provided in this document is subject to legal disclaimers.

© NXP Semiconductors N.V. 2015. All rights reserved.

6. Pinning information

6.1 Pinning

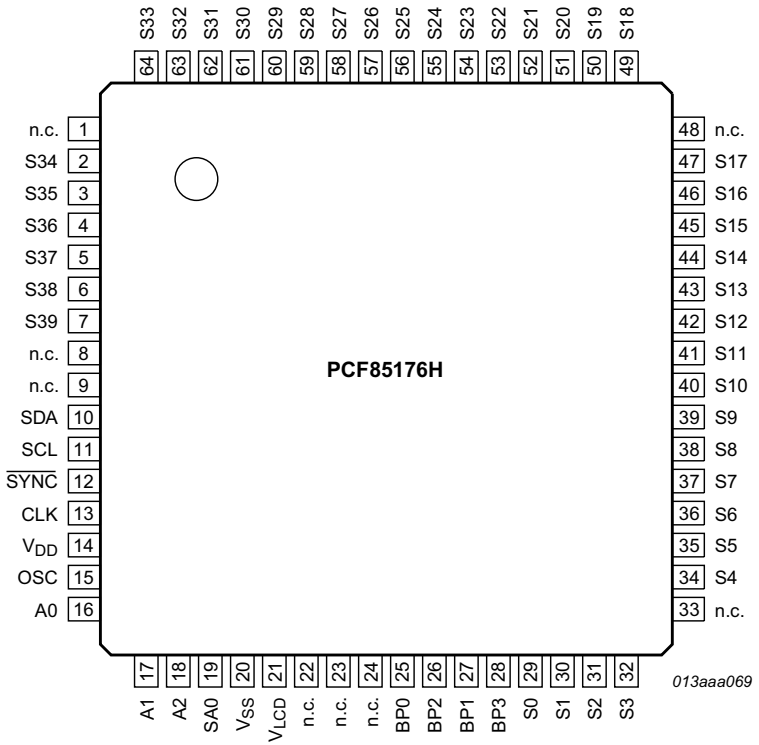

Top view. For mechanical details, see Figure 29.

Fig 2. Pinning diagram for TQFP64 (PCF85176H)

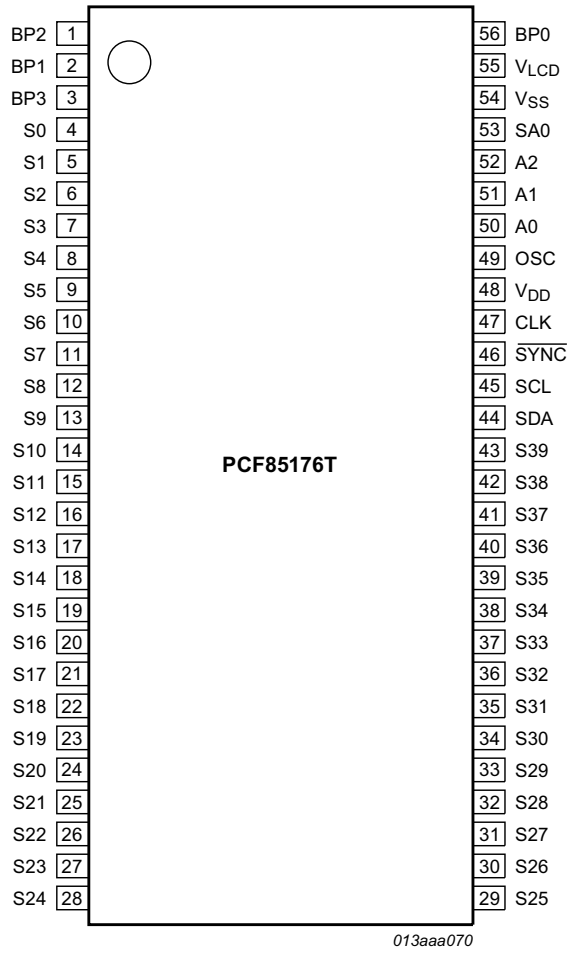

Top view. For mechanical details, see Figure 30.

Fig 3. Pinning diagram for TSSOP56 (PCF85176T)

All information provided in this document is subject to legal disclaimers.

© NXP Semiconductors N.V. 2015. All rights reserved.

6.2 Pin description

Table 4. Pin description

Input or input/output pins must always be at a defined level (V_{SS} or V_{DD}) unless otherwise specified.

Symbol	Pin			Description
	TQFP64 (PCF85176H)	TSSOP56 (PCF85176T)	Type	
SDA	10	44	input/output	I^2C-bus serial data line
SCL	11	45	input	I^2C-bus serial clock
CLK	13	47	input/output	clock line
V_{DD}	14	48	supply	supply voltage
$\overline{SYNC}$	12	46	input/output	cascade synchronization input or output; if not used it must be left open
OSC	15	49	input	internal oscillator enable
A0 to A2	16 to 18	50 to 52	input	subaddress inputs
SA0	19	53	input	I^2C-bus address input
V_{SS}	20	54	supply	ground supply voltage
V_{LCD}	21	55	supply	LCD supply voltage
BP0, BP2, BP1, BP3	25 to 28	56, 1, 2, 3	output	LCD backplane outputs
S0 to S39	29 to 32, 34 to 47, 49 to 64, 2 to 7	4 to 43	output	LCD segment outputs
n.c.	1, 8, 9, 22 to 24, 33, 48	-	-	not connected; do not connect and do not use as feed through

All information provided in this document is subject to legal disclaimers.

© NXP Semiconductors N.V. 2015. All rights reserved.

7. Functional description

The PCF85176 is a versatile peripheral device designed to interface between any microcontroller to a wide variety of LCD segment or dot matrix displays (see Figure 4). It can directly drive any static or multiplexed LCD containing up to four backplanes and up to 40 segments.

7.1 Commands of PCF85176

The commands available to the PCF85176 are defined in Table 5.

Table 5. Definition of PCF85176 commands

Bit position labeled as - is not used.

Command	Operation Code								Reference
Bit	**7**	**6**	**5**	**4**	**3**	**2**	**1**	**0**	
mode-set	C	1	0	-	E	B	M[1:0]		Table 7
load-data-pointer	C	0	P[5:0]						Table 8
device-select	C	1	1	0	0	A[2:0]			Table 9
bank-select	C	1	1	1	1	0	I	O	Table 10
blink-select	C	1	1	1	0	AB	BF[1:0]		Table 11

All available commands carry a continuation bit C in their most significant bit position as shown in Figure 22. When this bit is set logic 1, it indicates that the next byte of the transfer to arrive will also represent a command. If this bit is set logic 0, it indicates that the command byte is the last in the transfer. Further bytes are regarded as display data (see Table 6).

Table 6. C bit description

Bit	Symbol	Value	Description
7	C		**continue bit**
		0	last control byte in the transfer; next byte will be regarded as display data
		1	control bytes continue; next byte will be a command too

All information provided in this document is subject to legal disclaimers.

© NXP Semiconductors N.V. 2015. All rights reserved.

7.1.1 Command: mode-set

The mode-set command allows configuring the multiplex mode, the bias levels and enabling or disabling the display.

Table 7. Mode-set command bit description

Bit	Symbol	Value	Description
7	C	0, 1	see Table 6
6 to 5	-	10	fixed value
4	-	-	unused
3	E		**display status**[1]
		0[2]	disabled (blank)[3]
		1	enabled
2	B		**LCD bias configuration**[4]
		0[2]	1/3 bias
		1	1/2 bias
1 to 0	M[1:0]		**LCD drive mode selection**
		01	static; BP0
		10	1:2 multiplex; BP0, BP1
		11	1:3 multiplex; BP0, BP1, BP2
		00[2]	1:4 multiplex; BP0, BP1, BP2, BP3

[1] The possibility to disable the display allows implementation of blinking under external control.

[2] Default value.

[3] The display is disabled by setting all backplane and segment outputs to V_{LCD}.

[4] Not applicable for static drive mode.

7.1.2 Command: load-data-pointer

The load-data-pointer command defines the display RAM address where the following display data are sent to.

Table 8. Load-data-pointer command bit description

See Section 7.6.1.

Bit	Symbol	Value	Description
7	C	0, 1	see Table 6
6	-	0	fixed value
5 to 0	P[5:0]	000000[1] to 100111	6-bit binary value, 0 to 39; transferred to the data pointer to define one of 40 display RAM addresses

[1] Default value.

All information provided in this document is subject to legal disclaimers.

© NXP Semiconductors N.V. 2015. All rights reserved.

7.1.3 Command: device-select

The device-select command allows defining the subaddress counter value.

Table 9. Device-select command bit description

See Section 7.6.2.

Bit	Symbol	Value	Description
7	C	0, 1	see Table 6
6 to 3	-	1100	fixed value
2 to 0	A[2:0]	000[1] to 111	3-bit binary value, 0 to 7; transferred to the subaddress counter to define 1 of 8 hardware subaddresses

[1] Default value.

7.1.4 Command: bank-select

The bank-select command controls where data is written to RAM and where it is displayed from.

Table 10. Bank-select command bit description

See Section 7.6.5.

Bit	Symbol	Value	Description	
			Static	**1:2 multiplex[1]**
7	C	0, 1	see Table 6	
6 to 2	-	11110	fixed value	
1	I		**input bank selection**; storage of arriving display data	
		0[2]	RAM row 0	RAM rows 0 and 1
		1	RAM row 2	RAM rows 2 and 3
0	O		**output bank selection**; retrieval of LCD display data	
		0[2]	RAM row 0	RAM rows 0 and 1
		1	RAM row 2	RAM rows 2 and 3

[1] The bank-select command has no effect in 1:3 and 1:4 multiplex drive modes.

[2] Default value.

All information provided in this document is subject to legal disclaimers.

© NXP Semiconductors N.V. 2015. All rights reserved.

7.1.5 Command: blink-select

The blink-select command allows configuring the blink mode and the blink frequency.

Table 11. Blink-select command bit description

See Section 7.1.5.1.

Bit	Symbol	Value	Description
7	C	0, 1	see Table 6
6 to 3	-	1110	fixed value
2	AB		**blink mode selection**
		0[1]	normal blinking[2]
		1	alternate RAM bank blinking[3]
1 to 0	BF[1:0]		**blink frequency selection**
		00[1]	off
		01	1
		10	2
		11	3

[1] Default value.

[2] Normal blinking is assumed when the LCD multiplex drive modes 1:3 or 1:4 are selected.

[3] Alternate RAM bank blinking does not apply in 1:3 and 1:4 multiplex drive modes.

7.1.5.1 Blinking

The display blinking capabilities of the PCF85176 are very versatile. The whole display can blink at frequencies selected by the blink-select command (see Table 11). The blink frequencies are derived from the clock frequency. The ratio between the clock and blink frequencies depends on the blink mode selected (see Table 12).

An additional feature is for an arbitrary selection of LCD segments/elements to blink. This applies to the static and 1:2 multiplex drive modes and can be implemented without any communication overheads. With the output bank selector, the displayed RAM banks are exchanged with alternate RAM banks at the blink frequency. This mode can also be specified by the blink-select command.

In the 1:3 and 1:4 multiplex modes, where no alternative RAM bank is available, groups of LCD segments/elements can blink by selectively changing the display RAM data at fixed time intervals.

The entire display can blink at a frequency other than the nominal blink frequency. This can be effectively performed by resetting and setting the display enable bit E at the required rate using the mode-set command (see Table 7).

All information provided in this document is subject to legal disclaimers.

© NXP Semiconductors N.V. 2015. All rights reserved.

Table 12. Blink frequencies

Blink mode	Blink frequency[1]
off	-
1	$f_{blink} = \frac{f_{clk}}{768}$
2	$f_{blink} = \frac{f_{clk}}{1536}$
3	$f_{blink} = \frac{f_{clk}}{3072}$

[1] The blink frequency is proportional to the clock frequency (f_{clk}). For the range of the clock frequency, see Table 20.

7.2 Power-On Reset (POR)

At power-on the PCF85176 resets to the following starting conditions:

- All backplane and segment outputs are set to V_{LCD}
- The selected drive mode is: 1:4 multiplex with $\frac{1}{3}$ bias
- Blinking is switched off
- Input and output bank selectors are reset
- The I^2C-bus interface is initialized
- The data pointer and the subaddress counter are cleared (set to logic 0)
- The display is disabled (bit E = 0, see Table 7)

Remark: Do not transfer data on the I^2C-bus for at least 1 ms after a power-on to allow the reset action to complete.

All information provided in this document is subject to legal disclaimers.

© NXP Semiconductors N.V. 2015. All rights reserved.

7.3 Possible display configurations

The possible display configurations of the PCF85176 depend on the number of active backplane outputs required. A selection of display configurations is shown in Table 13. All of these configurations can be implemented in the typical system shown in Figure 5.

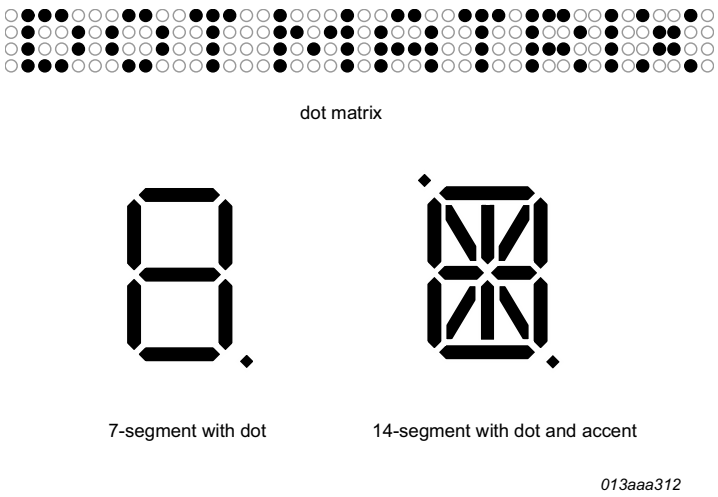

Fig 4. Example of displays suitable for PCF85176

Table 13. Selection of possible display configurations

Number of				
Backplanes	**Icons**	**Digits/Characters**		**Dot matrix: segments/ elements**
		7-segment[1]	**14-segment[2]**	
4	160	20	10	160 (4 × 40)
3	120	15	7	120 (3 × 40)
2	80	10	5	80 (2 × 40)
1	40	5	2	40 (1 × 40)

[1] 7 segment display has 8 segments/elements including the decimal point.

[2] 14 segment display has 16 segments/elements including decimal point and accent dot.

All information provided in this document is subject to legal disclaimers.

© NXP Semiconductors N.V. 2015. All rights reserved.

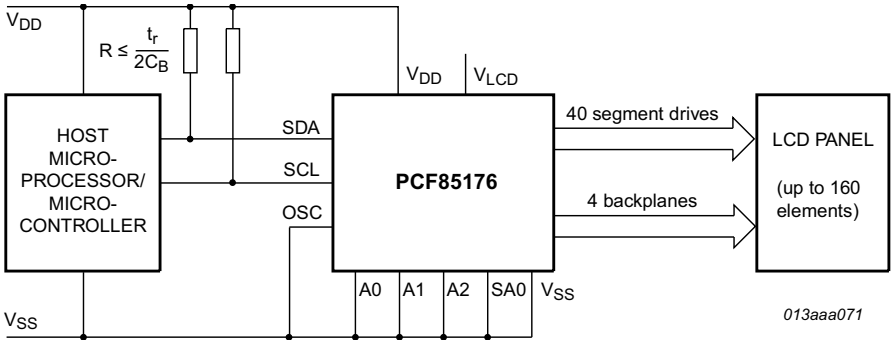

The resistance of the power lines must be kept to a minimum.

Fig 5. Typical system configuration

The host microcontroller maintains the 2-line I²C-bus communication channel with the PCF85176. The internal oscillator is enabled by connecting pin OSC to pin V_{SS}. The appropriate biasing voltages for the multiplexed LCD waveforms are generated internally. The only other connections required to complete the system are the power supplies (V_{DD}, V_{SS}, and V_{LCD}) and the LCD panel chosen for the application.

7.3.1 LCD bias generator

Fractional LCD biasing voltages are obtained from an internal voltage divider of three impedances connected between V_{LCD} and V_{SS}. The center impedance is bypassed by switch if the ½ bias voltage level for the 1:2 multiplex drive mode configuration is selected.

7.3.2 Display register

The display register holds the display data while the corresponding multiplex signals are generated.

7.3.3 LCD voltage selector

The LCD voltage selector coordinates the multiplexing of the LCD in accordance with the selected LCD drive configuration. The operation of the voltage selector is controlled by the mode-set command from the command decoder. The biasing configurations that apply to the preferred modes of operation, together with the biasing characteristics as functions of V_{LCD} and the resulting discrimination ratios (D) are given in Table 14.

Discrimination is a term which is defined as the ratio of the on and off RMS voltage across a segment. It can be thought of as a measurement of contrast.

Table 14. Biasing characteristics

LCD drive mode	Number of:		LCD bias configuration	$\frac{V_{off(RMS)}}{V_{LCD}}$	$\frac{V_{on(RMS)}}{V_{LCD}}$	$D = \frac{V_{on(RMS)}}{V_{off(RMS)}}$
	Backplanes	Levels				
static	1	2	static	0	1	∞
1:2 multiplex	2	3	½	0.354	0.791	2.236
1:2 multiplex	2	4	⅓	0.333	0.745	2.236
1:3 multiplex	3	4	⅓	0.333	0.638	1.915
1:4 multiplex	4	4	⅓	0.333	0.577	1.732

All information provided in this document is subject to legal disclaimers.

© NXP Semiconductors N.V. 2015. All rights reserved.

A practical value for V_{LCD} is determined by equating $V_{off(RMS)}$ with a defined LCD threshold voltage ($V_{th(off)}$), typically when the LCD exhibits approximately 10 % contrast. In the static drive mode, a suitable choice is $V_{LCD} > 3V_{th(off)}$.

Multiplex drive modes of 1:3 and 1:4 with ½ bias are possible but the discrimination and hence the contrast ratios are smaller.

Bias is calculated by $\frac{1}{1+a}$, where the values for a are

a = 1 for ½ bias

a = 2 for ⅓ bias

The RMS on-state voltage ($V_{on(RMS)}$) for the LCD is calculated with Equation 1:

$$V_{on(RMS)} = V_{LCD}\sqrt{\frac{a^2+2a+n}{n\times(1+a)^2}} \quad (1)$$

where the values for n are

n = 1 for static drive mode

n = 2 for 1:2 multiplex drive mode

n = 3 for 1:3 multiplex drive mode

n = 4 for 1:4 multiplex drive mode

The RMS off-state voltage ($V_{off(RMS)}$) for the LCD is calculated with Equation 2:

$$V_{off(RMS)} = V_{LCD}\sqrt{\frac{a^2-2a+n}{n\times(1+a)^2}} \quad (2)$$

Discrimination is the ratio of $V_{on(RMS)}$ to $V_{off(RMS)}$ and is determined from Equation 3:

$$D = \frac{V_{on(RMS)}}{V_{off(RMS)}} = \sqrt{\frac{a^2+2a+n}{a^2-2a+n}} \quad (3)$$

Using Equation 3, the discrimination for an LCD drive mode of 1:3 multiplex with ½ bias is $\sqrt{3} = 1.732$ and the discrimination for an LCD drive mode of 1:4 multiplex with ½ bias is $\frac{\sqrt{21}}{3} = 1.528$.

The advantage of these LCD drive modes is a reduction of the LCD full scale voltage V_{LCD} as follows:

- 1:3 multiplex (½ bias): $V_{LCD} = \sqrt{6}\times V_{off(RMS)} = 2.449V_{off(RMS)}$
- 1:4 multiplex (½ bias): $V_{LCD} = \left[\frac{(4\times\sqrt{3})}{3}\right] = 2.309V_{off(RMS)}$

These compare with $V_{LCD} = 3V_{off(RMS)}$ when ⅓ bias is used.

V_{LCD} is sometimes referred as the LCD operating voltage.

All information provided in this document is subject to legal disclaimers.

© NXP Semiconductors N.V. 2015. All rights reserved.

7.3.3.1 Electro-optical performance

Suitable values for $V_{on(RMS)}$ and $V_{off(RMS)}$ are dependent on the LCD liquid used. The RMS voltage, at which a pixel is switched on or off, determine the transmissibility of the pixel.

For any given liquid, there are two threshold values defined. One point is at 10 % relative transmission (at $V_{th(off)}$) and the other at 90 % relative transmission (at $V_{th(on)}$), see Figure 6. For a good contrast performance, the following rules should be followed:

$$V_{on(RMS)} \geq V_{th(on)} \tag{4}$$

$$V_{off(RMS)} \leq V_{th(off)} \tag{5}$$

$V_{on(RMS)}$ and $V_{off(RMS)}$ are properties of the display driver and are affected by the selection of a, n (see Equation 1 to Equation 3) and the V_{LCD} voltage.

$V_{th(off)}$ and $V_{th(on)}$ are properties of the LCD liquid and can be provided by the module manufacturer. $V_{th(off)}$ is sometimes named V_{th}. $V_{th(on)}$ is sometimes named saturation voltage V_{sat}.

It is important to match the module properties to those of the driver in order to achieve optimum performance.

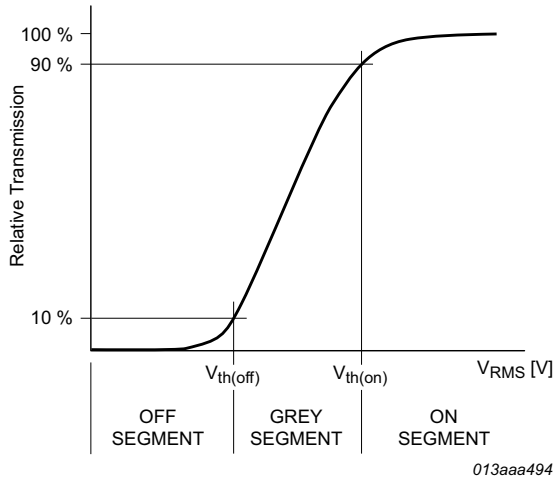

Fig 6. Electro-optical characteristic: relative transmission curve of the liquid

All information provided in this document is subject to legal disclaimers.

© NXP Semiconductors N.V. 2015. All rights reserved.

7.3.4 LCD drive mode waveforms

7.3.4.1 Static drive mode

The static LCD drive mode is used when a single backplane is provided in the LCD. The backplane (BPn) and segment (Sn) drive waveforms for this mode are shown in Figure 7.

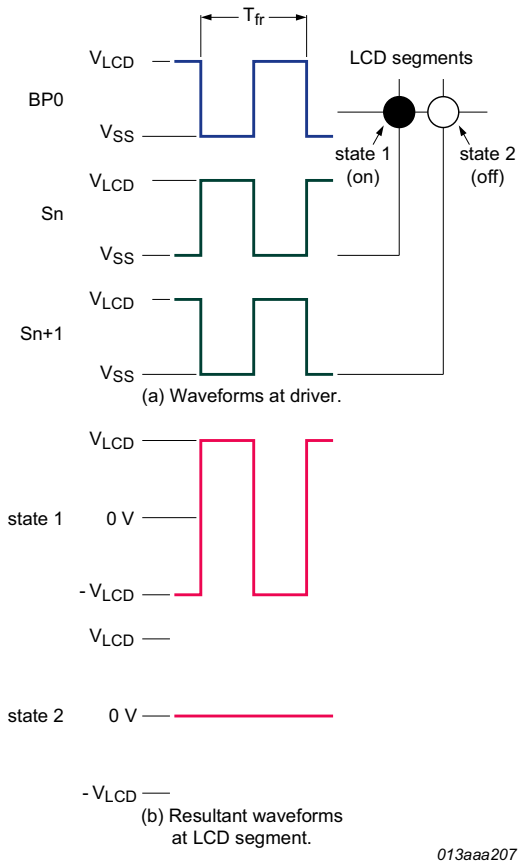

$V_{state1}(t) = V_{Sn}(t) - V_{BP0}(t)$.

$V_{on(RMS)} = V_{LCD}$.

$V_{state2}(t) = V_{(Sn + 1)}(t) - V_{BP0}(t)$.

$V_{off(RMS)} = 0$ V.

Fig 7. Static drive mode waveforms

All information provided in this document is subject to legal disclaimers.

© NXP Semiconductors N.V. 2015. All rights reserved.

7.3.4.2 1:2 Multiplex drive mode

When two backplanes are provided in the LCD, the 1:2 multiplex mode applies. The PCF85176 allows the use of ½ bias or ⅓ bias in this mode as shown in Figure 8 and Figure 9.

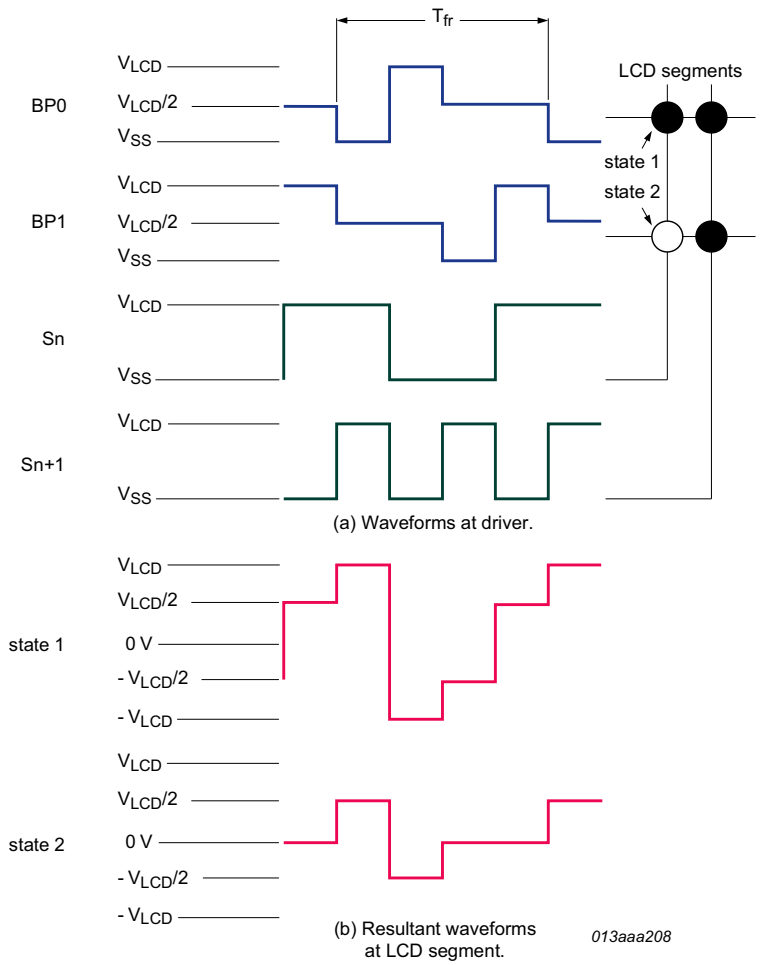

$V_{state1}(t) = V_{Sn}(t) - V_{BP0}(t)$.

$V_{on(RMS)} = 0.791V_{LCD}$.

$V_{state2}(t) = V_{Sn}(t) - V_{BP1}(t)$.

$V_{off(RMS)} = 0.354V_{LCD}$.

Fig 8. Waveforms for the 1:2 multiplex drive mode with ½ bias

All information provided in this document is subject to legal disclaimers.

© NXP Semiconductors N.V. 2015. All rights reserved.

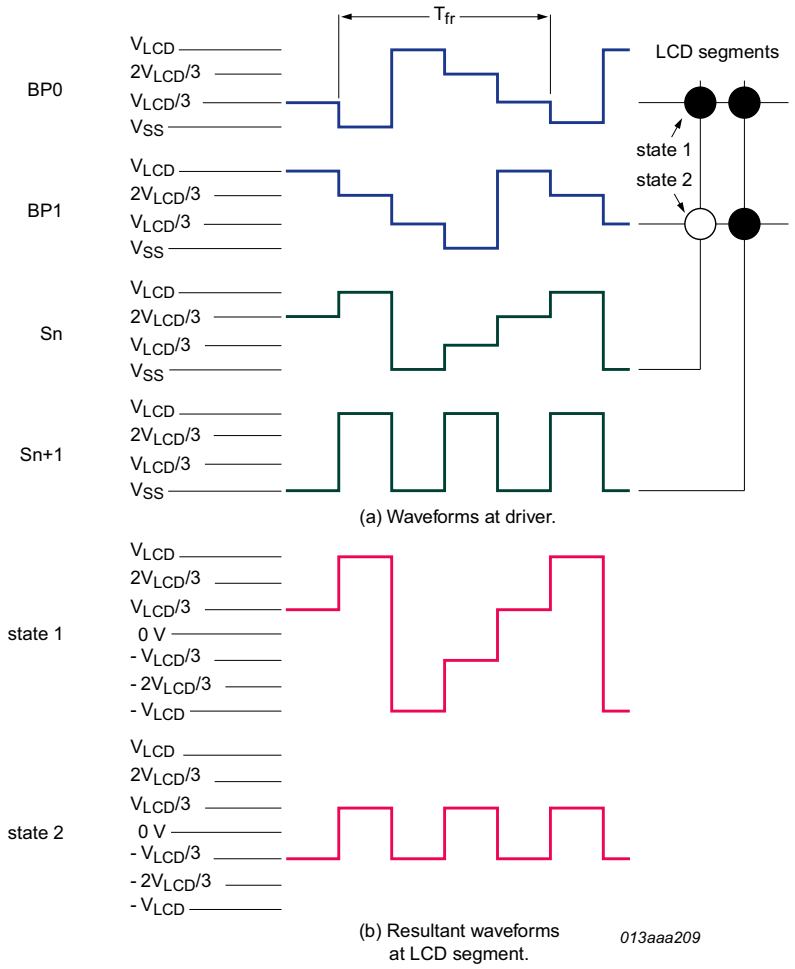

$V_{state1}(t) = V_{Sn}(t) - V_{BP0}(t)$.

$V_{on(RMS)} = 0.745V_{LCD}$.

$V_{state2}(t) = V_{Sn}(t) - V_{BP1}(t)$.

$V_{off(RMS)} = 0.333V_{LCD}$.

Fig 9. Waveforms for the 1:2 multiplex drive mode with ⅓ bias

All information provided in this document is subject to legal disclaimers.

© NXP Semiconductors N.V. 2015. All rights reserved.

7.3.4.3 1:3 Multiplex drive mode

When three backplanes are provided in the LCD, the 1:3 multiplex drive mode applies, as shown in Figure 10.

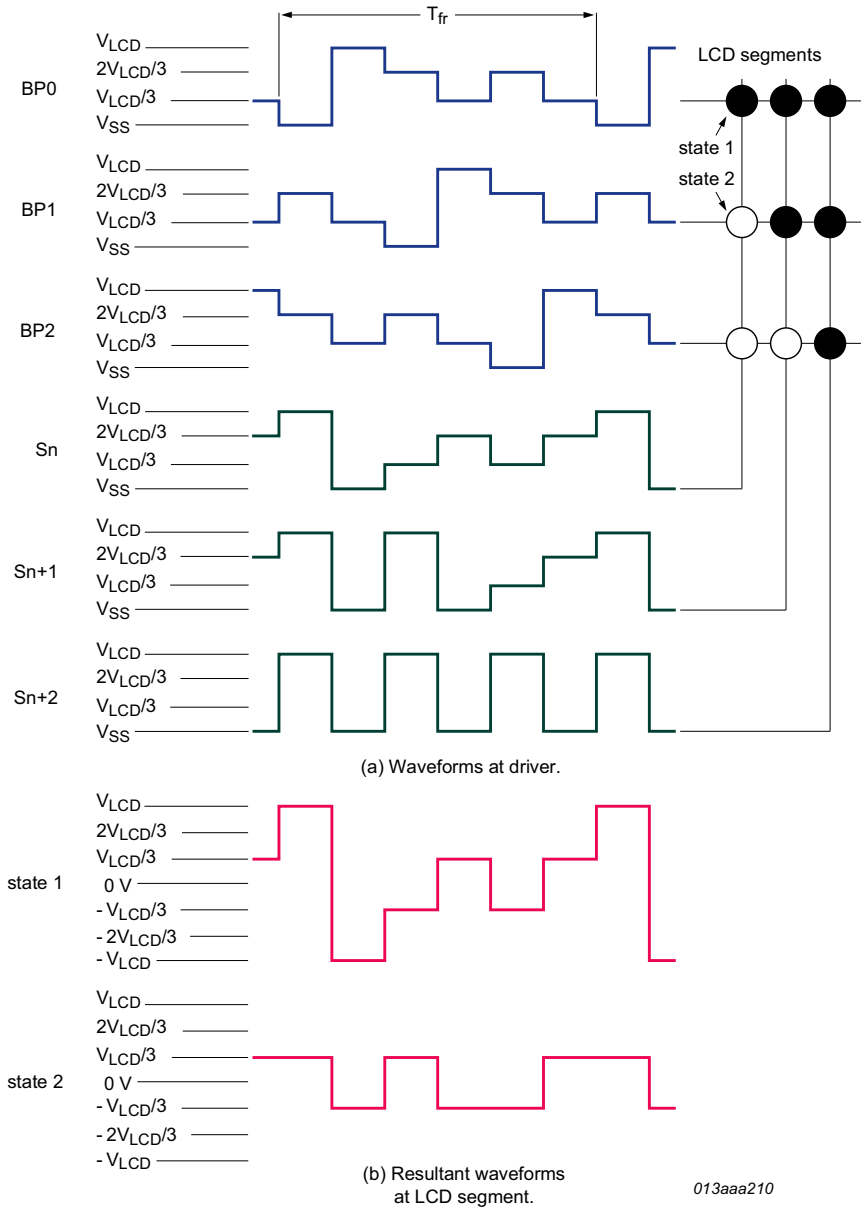

$V_{state1}(t) = V_{Sn}(t) - V_{BP0}(t)$.

$V_{on(RMS)} = 0.638V_{LCD}$.

$V_{state2}(t) = V_{Sn}(t) - V_{BP1}(t)$.

$V_{off(RMS)} = 0.333V_{LCD}$.

Fig 10. Waveforms for the 1:3 multiplex drive mode with ⅓ bias

All information provided in this document is subject to legal disclaimers.

© NXP Semiconductors N.V. 2015. All rights reserved.

7.3.4.4 1:4 Multiplex drive mode

When four backplanes are provided in the LCD, the 1:4 multiplex drive mode applies as shown in Figure 11.

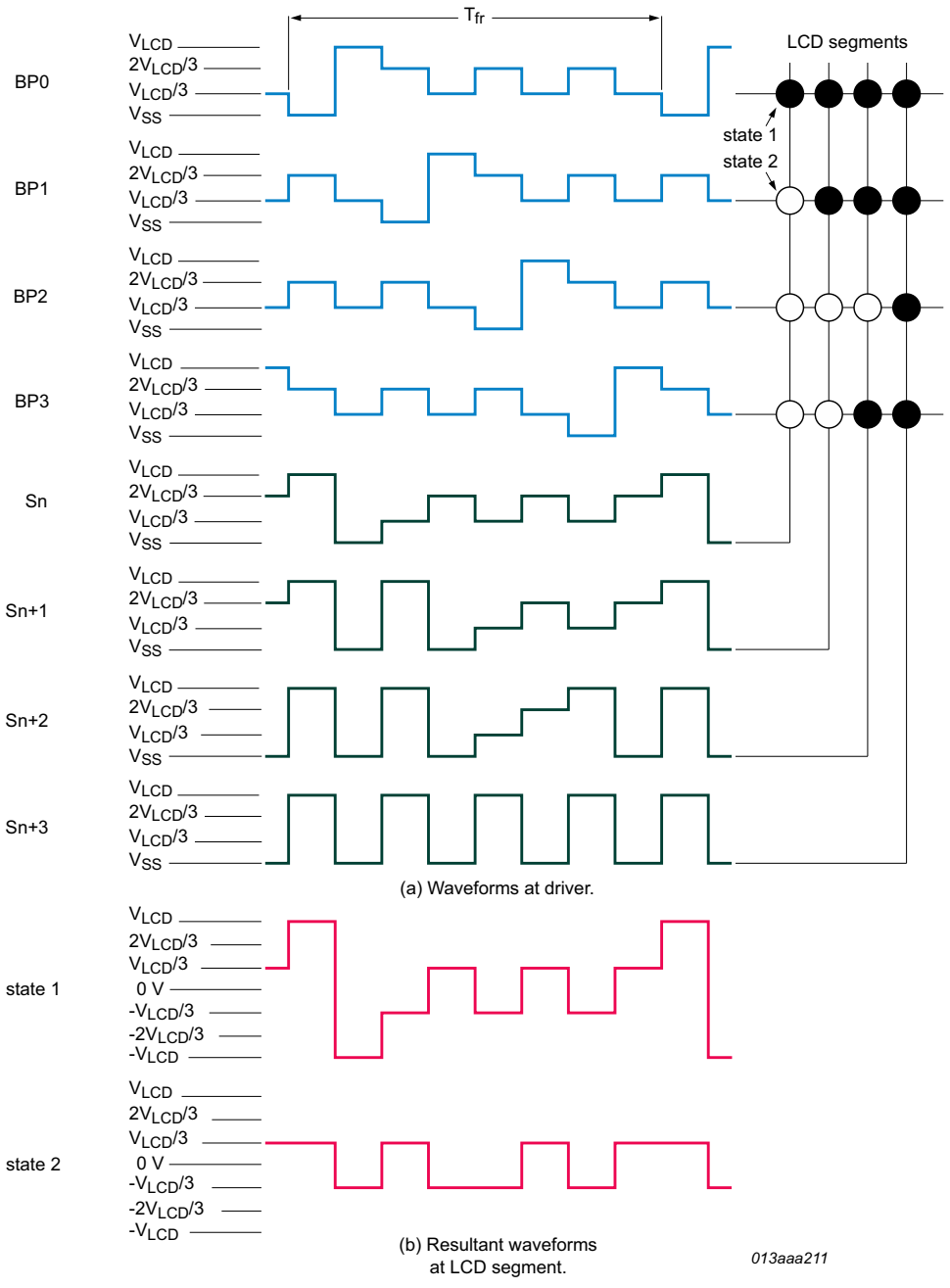

$V_{state1}(t) = V_{Sn}(t) - V_{BP0}(t)$.

$V_{on(RMS)} = 0.577V_{LCD}$.

$V_{state2}(t) = V_{Sn}(t) - V_{BP1}(t)$.

$V_{off(RMS)} = 0.333V_{LCD}$.

Fig 11. Waveforms for the 1:4 multiplex drive mode with ⅓ bias

All information provided in this document is subject to legal disclaimers.

© NXP Semiconductors N.V. 2015. All rights reserved.

7.4 Oscillator

7.4.1 Internal clock

The internal logic of the PCF85176 and its LCD drive signals are timed either by its internal oscillator or by an external clock. The internal oscillator is enabled by connecting pin OSC to pin V_{SS}. If the internal oscillator is used, the output from pin CLK can be used as the clock signal for several PCF85176 in the system that are connected in cascade.

7.4.2 External clock

Pin CLK is enabled as an external clock input by connecting pin OSC to V_{DD}. The LCD frame frequency is determined by the clock frequency (f_{clk}).

Remark: A clock signal must always be supplied to the device. Removing the clock may freeze the LCD in a DC state, which is not suitable for the liquid crystal.

7.4.3 Timing

The PCF85176 timing controls the internal data flow of the device. This includes the transfer of display data from the display RAM to the display segment outputs. In cascaded applications, the correct timing relationship between each PCF85176 in the system is maintained by the synchronization signal at pin $\overline{\text{SYNC}}$. The timing also generates the LCD frame frequency signal. The frame frequency signal is a fixed division of the clock frequency from either the internal or an external clock: $f_{fr} = \frac{f_{clk}}{24}$

7.5 Backplane and segment outputs

7.5.1 Backplane outputs

The LCD drive section includes 4 backplane outputs BP0 to BP3 which must be connected directly to the LCD. The backplane output signals are generated in accordance with the selected LCD drive mode. If less than four backplane outputs are required, the unused outputs can be left open-circuit.

- In 1:3 multiplex drive mode, BP3 carries the same signal as BP1, therefore these two adjacent outputs can be tied together to give enhanced drive capabilities
- In 1:2 multiplex drive mode, BP0 and BP2, respectively, BP1 and BP3 all carry the same signals and may also be paired to increase the drive capabilities
- In static drive mode, the same signal is carried by all four backplane outputs and they can be connected in parallel for very high drive requirements

7.5.2 Segment outputs

The LCD drive section includes 40 segment outputs S0 to S39 which should be connected directly to the LCD. The segment output signals are generated in accordance with the multiplexed backplane signals and with data residing in the display register. When less than 40 segment outputs are required, the unused segment outputs should be left open-circuit.

All information provided in this document is subject to legal disclaimers.

© NXP Semiconductors N.V. 2015. All rights reserved.

7.6 Display RAM

The display RAM is a static 40 × 4-bit RAM which stores LCD data.

There is a one-to-one correspondence between

- the bits in the RAM bitmap and the LCD segments/elements
- the RAM columns and the segment outputs
- the RAM rows and the backplane outputs.

A logic 1 in the RAM bitmap indicates the on-state of the corresponding LCD element; similarly, a logic 0 indicates the off-state.

The display RAM bitmap, Figure 12, shows the rows 0 to 3 which correspond with the backplane outputs BP0 to BP3, and the columns 0 to 39 which correspond with the segment outputs S0 to S39. In multiplexed LCD applications the segment data of the first, second, third, and fourth row of the display RAM are time-multiplexed with BP0, BP1, BP2, and BP3 respectively.

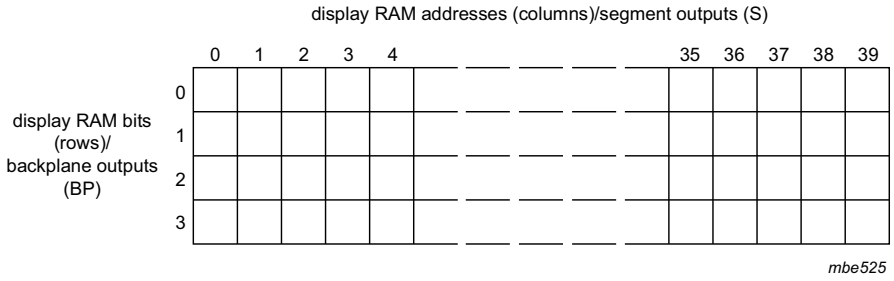

The display RAM bitmap shows the direct relationship between the display RAM column and the segment outputs; and between the bits in a RAM row and the backplane outputs.

Fig 12. Display RAM bitmap

When display data is transmitted to the PCF85176, the display bytes received are stored in the display RAM in accordance with the selected LCD drive mode. The data is stored as it arrives and depending on the current multiplex drive mode the bits are stored singularly, in pairs, triples, or quadruples. To illustrate the filling order, an example of a 7-segment display showing all drive modes is given in Figure 13. The RAM filling organization depicted applies equally to other LCD types.

- In static drive mode the eight transmitted data bits are placed into row 0 as 1 byte
- In 1:2 multiplex drive mode the eight transmitted data bits are placed in pairs into row 0 and 1 as four successive 2-bit RAM words
- In 1:3 multiplex drive mode the 8 bits are placed in triples into row 0, 1, and 2 as three successive 3-bit RAM words, with bit 3 of the third address left unchanged. It is not recommended to use this bit in a display because of the difficult addressing. This last bit may, if necessary, be controlled by an additional transfer to this address, but care should be taken to avoid overwriting adjacent data because always full bytes are transmitted (see Section 7.6.3)
- In 1:4 multiplex drive mode, the eight transmitted data bits are placed in quadruples into row 0, 1, 2, and 3 as two successive 4-bit RAM words

All information provided in this document is subject to legal disclaimers.

© NXP Semiconductors N.V. 2015. All rights reserved.

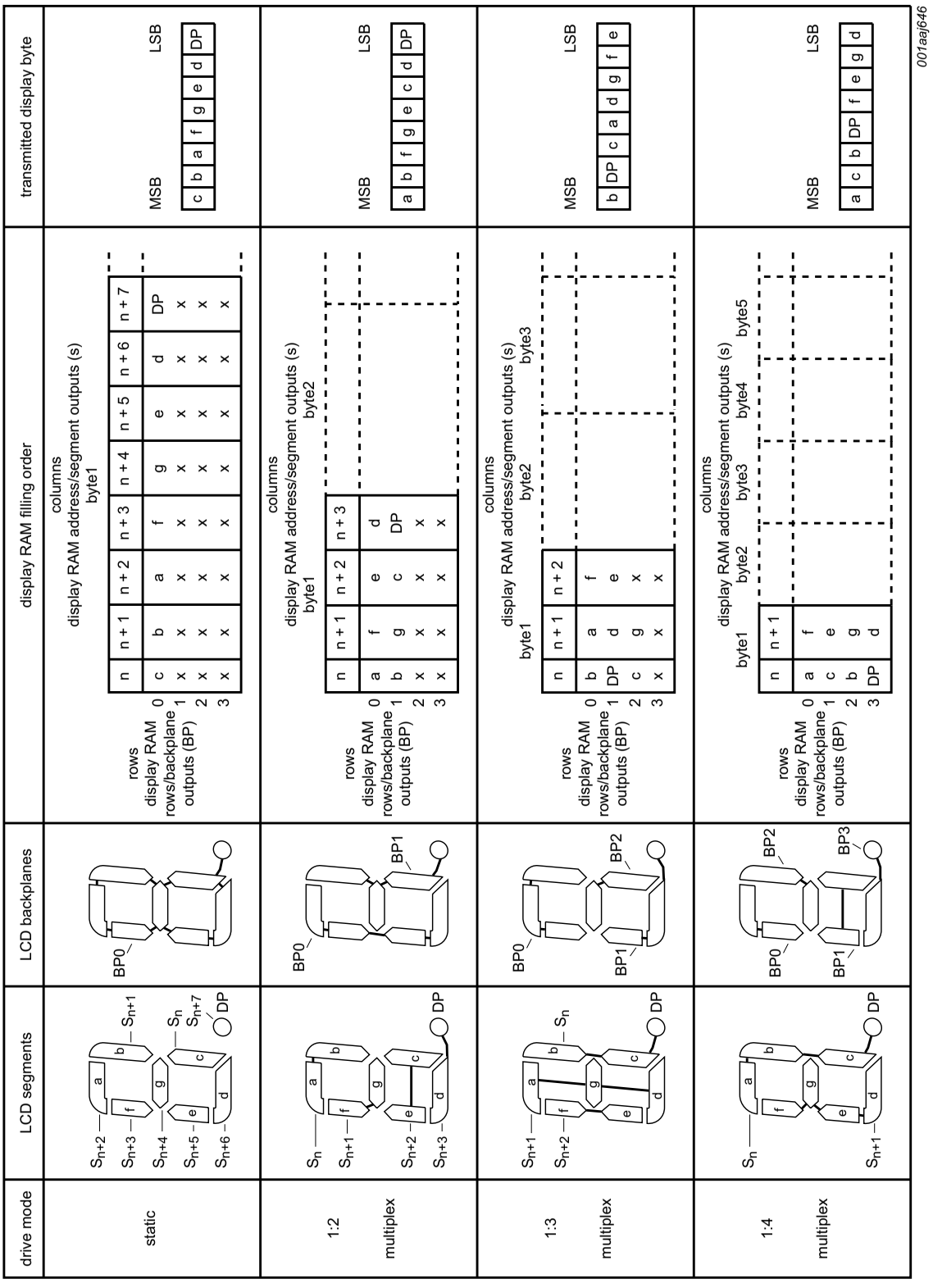

x = data bit unchanged.

Fig 13. Relationship between LCD layout, drive mode, display RAM filling order, and display data transmitted over the I²C-bus

All information provided in this document is subject to legal disclaimers.

© NXP Semiconductors N.V. 2015. All rights reserved.

7.6.1 Data pointer

The addressing mechanism for the display RAM is realized using the data pointer. This allows the loading of an individual display data byte, or a series of display data bytes, into any location of the display RAM. The sequence commences with the initialization of the data pointer by the load-data-pointer command (see Table 8). Following this command, an arriving data byte is stored at the display RAM address indicated by the data pointer. The filling order is shown in Figure 13.

After each byte is stored, the content of the data pointer is automatically incremented by a value dependent on the selected LCD drive mode:

- In static drive mode by eight
- In 1:2 multiplex drive mode by four
- In 1:3 multiplex drive mode by three
- In 1:4 multiplex drive mode by two

If an I^2C-bus data access terminates early, then the state of the data pointer is unknown. Consequently, the data pointer must be rewritten prior to further RAM accesses.

7.6.2 Subaddress counter

The storage of display data is determined by the contents of the subaddress counter. Storage is allowed only when the content of the subaddress counter matches with the hardware subaddress applied to A0, A1, and A2. The subaddress counter value is defined by the device-select command (see Table 9). If the content of the subaddress counter and the hardware subaddress do not match, then data storage is inhibited but the data pointer is incremented as if data storage had taken place. The subaddress counter is also incremented when the data pointer overflows.

The storage arrangements described lead to extremely efficient data loading in cascaded applications. When a series of display bytes are sent to the display RAM, automatic wrap-over to the next PCF85176 occurs when the last RAM address is exceeded. Subaddressing across device boundaries is successful even if the change to the next device in the cascade occurs within a transmitted character.

The hardware subaddress must not be changed while the device is being accessed on the I^2C-bus interface.

All information provided in this document is subject to legal disclaimers.

© NXP Semiconductors N.V. 2015. All rights reserved.

7.6.3 RAM writing in 1:3 multiplex drive mode

In 1:3 multiplex drive mode, the RAM is written as shown in Table 15 (see Figure 13 as well).

Table 15. Standard RAM filling in 1:3 multiplex drive mode

*Assumption: BP2/S2, BP2/S5, BP2/S8 etc. **are not connected** to any segments/elements on the display.*

Display RAM bits (rows)/ backplane outputs (BPn)	Display RAM addresses (columns)/segment outputs (Sn)										
	0	**1**	**2**	**3**	**4**	**5**	**6**	**7**	**8**	**9**	**:**
0	a7	a4	a1	b7	b4	b1	c7	c4	c1	d7	:
1	a6	a3	a0	b6	b3	b0	c6	c3	c0	d6	:
2	a5	a2	-	b5	b2	-	c5	c2	-	d5	:
3	-	-	-	-	-	-	-	-	-	-	:

If the bit at position BP2/S2 would be written by a second byte transmitted, then the mapping of the segment bits would change as illustrated in Table 16.

Table 16. Entire RAM filling by rewriting in 1:3 multiplex drive mode

*Assumption: BP2/S2, BP2/S5, BP2/S8 etc. **are connected** to segments/elements on the display.*

Display RAM bits (rows)/ backplane outputs (BPn)	Display RAM addresses (columns)/segment outputs (Sn)										
	0	**1**	**2**	**3**	**4**	**5**	**6**	**7**	**8**	**9**	**:**
0	a7	a4	a1/b7	b4	b1/c7	c4	c1/d7	d4	d1/e7	e4	:
1	a6	a3	a0/b6	b3	b0/c6	c3	c0/d6	d3	d0/e6	e3	:
2	a5	a2	b5	b2	c5	c2	d5	d2	e5	e2	:
3	-	-	-	-	-	-	-	-	-	-	:

In the case described in Table 16, the RAM has to be written entirely and BP2/S2, BP2/S5, BP2/S8 etc. have to be connected to segments/elements on the display. This can be achieved by a combination of writing and rewriting the RAM like follows:

- In the first write to the RAM, bits a7 to a0 are written
- The data-pointer (see Section 7.6.1 on page 23) has to be set to the address of bit a1
- In the second write, bits b7 to b0 are written, overwriting bits a1 and a0 with bits b7 and b6
- The data-pointer has to be set to the address of bit b1
- In the third write, bits c7 to c0 are written, overwriting bits b1 and b0 with bits c7 and c6

Depending on the method of writing to the RAM (standard or entire filling by rewriting), some segments/elements remain unused or can be used, but it has to be considered in the module layout process as well as in the driver software design.

All information provided in this document is subject to legal disclaimers.

© NXP Semiconductors N.V. 2015. All rights reserved.

7.6.4 Writing over the RAM address boundary

In all multiplex drive modes, depending on the setting of the data pointer, it is possible to fill the RAM over the RAM address boundary. If the PCF85176 is part of a cascade the additional bits fall into the next device that also generates the acknowledge signal. If the PCF85176 is a single device or the last device in a cascade, the additional bits are discarded and no acknowledge signal is generated.

7.6.5 Bank selection

7.6.5.1 Output bank selector

The output bank selector (see Table 10) selects one of the four rows per display RAM address for transfer to the display register. The actual row selected depends on the selected LCD drive mode in operation and on the instant in the multiplex sequence.

- In 1:4 multiplex mode, all RAM addresses of row 0 are selected, these are followed by the contents of row 1, 2, and then 3
- In 1:3 multiplex mode, rows 0, 1, and 2 are selected sequentially
- In 1:2 multiplex mode, rows 0 and 1 are selected
- In static mode, row 0 is selected

The PCF85176 includes a RAM bank switching feature in the static and 1:2 multiplex drive modes. In the static drive mode, the bank-select command may request the contents of row 2 to be selected for display instead of the contents of row 0. In the 1:2 multiplex mode, the contents of rows 2 and 3 may be selected instead of rows 0 and 1. This gives the provision for preparing display information in an alternative bank and to be able to switch to it once it is assembled.

7.6.5.2 Input bank selector

The input bank selector loads display data into the display RAM in accordance with the selected LCD drive configuration. Display data can be loaded in row 2 in static drive mode or in rows 2 and 3 in 1:2 multiplex drive mode by using the bank-select command (see Table 10). The input bank selector functions independently to the output bank selector.

7.6.5.3 RAM bank switching

The PCF85176 includes a RAM bank switching feature in the static and 1:2 multiplex drive modes. A bank can be thought of as one RAM row or a collection of RAM rows (see Figure 14). The RAM bank switching gives the provision for preparing display information in an alternative bank and to be able to switch to it once it is complete.

All information provided in this document is subject to legal disclaimers.

© NXP Semiconductors N.V. 2015. All rights reserved.

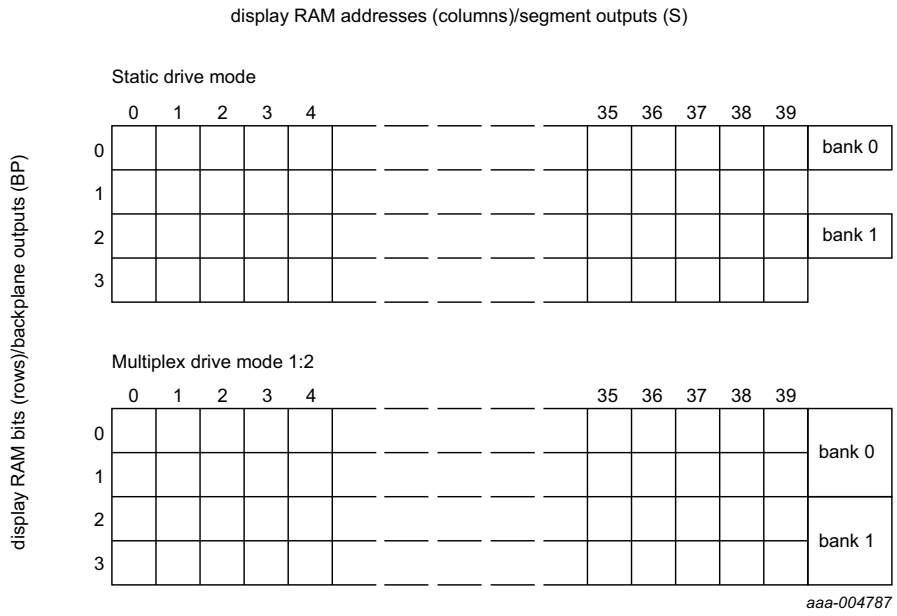

Fig 14. RAM banks in static and multiplex driving mode 1:2

There are two banks; bank 0 and bank 1. Figure 14 shows the location of these banks relative to the RAM map. Input and output banks can be set independently from one another with the Bank-select command (see Table 10 on page 8). Figure 15 shows the concept.

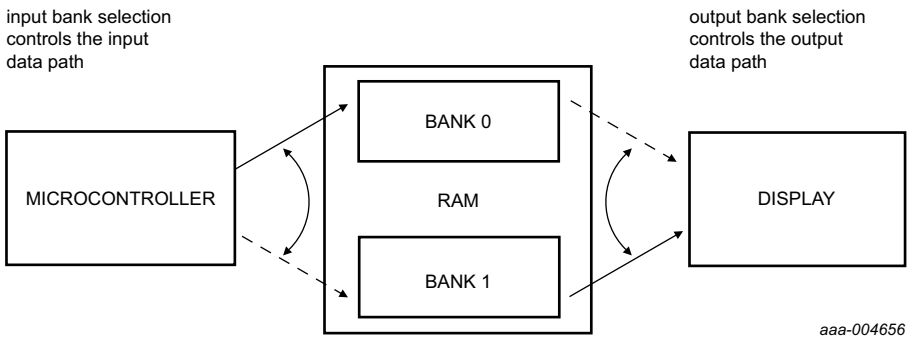

Fig 15. Bank selection

In the static drive mode, the bank-select command may request the contents of row 2 to be selected for display instead of the contents of row 0. In the 1:2 multiplex mode, the contents of rows 2 and 3 may be selected instead of rows 0 and 1. This gives the provision for preparing display information in an alternative bank and to be able to switch to it once it is assembled.

In Figure 16 an example is shown for 1:2 multiplex drive mode where the displayed data is read from the first two rows of the memory (bank 0), while the transmitted data is stored in the second two rows of the memory (bank 1).

All information provided in this document is subject to legal disclaimers.

© NXP Semiconductors N.V. 2015. All rights reserved.

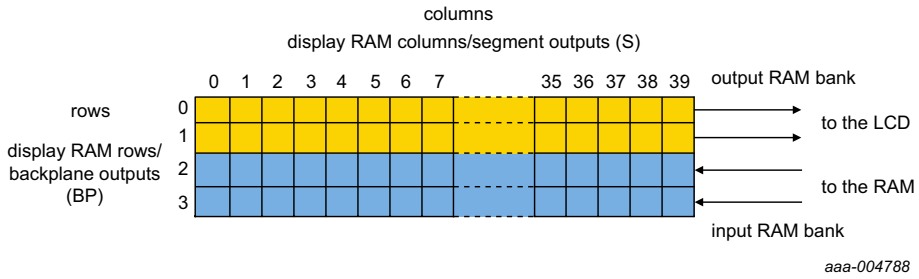

Fig 16. Example of the Bank-select command with multiplex drive mode 1:2

All information provided in this document is subject to legal disclaimers.

© NXP Semiconductors N.V. 2015. All rights reserved.

8. Characteristics of the I²C-bus

The I²C-bus is for bidirectional, two-line communication between different ICs or modules. The two lines are a Serial DAta line (SDA) and a Serial CLock line (SCL). Both lines must be connected to a positive supply via a pull-up resistor when connected to the output stages of a device. Data transfer may be initiated only when the bus is not busy.

8.1 Bit transfer

One data bit is transferred during each clock pulse. The data on the SDA line must remain stable during the HIGH period of the clock pulse as changes in the data line at this time is interpreted as a control signal (see Figure 17).

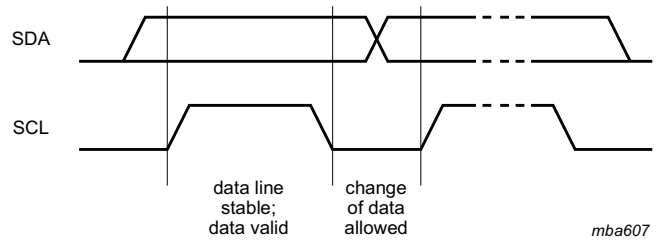

Fig 17. Bit transfer

8.2 START and STOP conditions

Both data and clock lines remain HIGH when the bus is not busy.

A HIGH-to-LOW transition of the data line while the clock is HIGH is defined as the START condition - S.

A LOW-to-HIGH transition of the data line while the clock is HIGH is defined as the STOP condition - P.

The START and STOP conditions are illustrated in Figure 18.

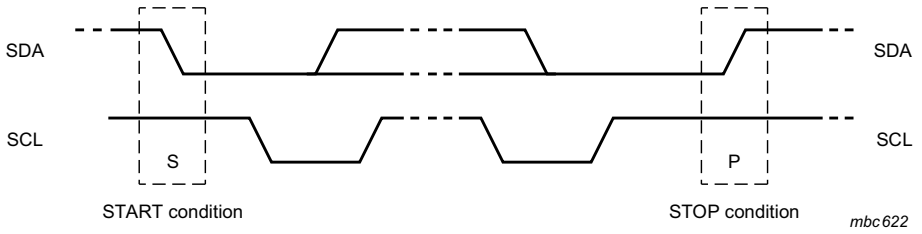

Fig 18. Definition of START and STOP conditions

8.3 System configuration

A device generating a message is a transmitter, a device receiving a message is the receiver. The device that controls the message is the master and the devices which are controlled by the master are the slaves. The system configuration is shown in Figure 19.

All information provided in this document is subject to legal disclaimers.

© NXP Semiconductors N.V. 2015. All rights reserved.

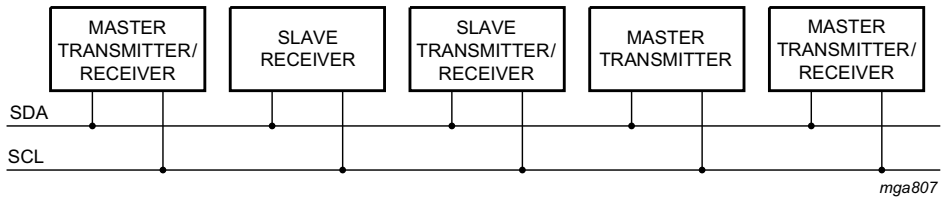

Fig 19. System configuration

8.4 Acknowledge

The number of data bytes transferred between the START and STOP conditions from transmitter to receiver is unlimited. Each byte of 8 bits is followed by an acknowledge cycle.

- A slave receiver, which is addressed, must generate an acknowledge after the reception of each byte
- A master receiver must generate an acknowledge after the reception of each byte that has been clocked out of the slave transmitter
- The device that acknowledges must pull-down the SDA line during the acknowledge clock pulse, so that the SDA line is stable LOW during the HIGH period of the acknowledge related clock pulse (set-up and hold times must be considered)
- A master receiver must signal an end of data to the transmitter by not generating an acknowledge on the last byte that has been clocked out of the slave. In this event, the transmitter must leave the data line HIGH to enable the master to generate a STOP condition

Acknowledgement on the I^2C-bus is illustrated in Figure 20.

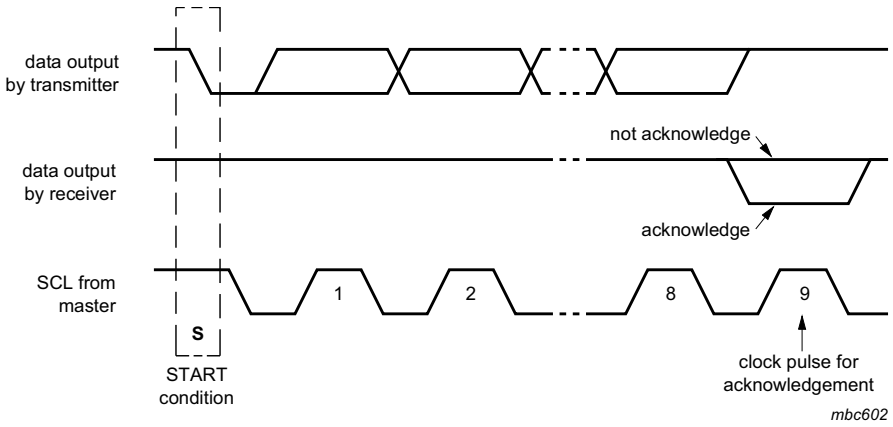

Fig 20. Acknowledgement of the I^2C-bus

All information provided in this document is subject to legal disclaimers.

© NXP Semiconductors N.V. 2015. All rights reserved.

8.5 I²C-bus controller

The PCF85176 acts as an I²C-bus slave receiver. It does not initiate I²C-bus transfers or transmit data to an I²C-bus master receiver. The only data output from the PCF85176 are the acknowledge signals of the selected devices. Device selection depends on the I²C-bus slave address, on the transferred command data and on the hardware subaddress.

In single device applications, the hardware subaddress inputs A0, A1, and A2 are normally tied to V_{SS} which defines the hardware subaddress 0. In multiple device applications A0, A1, and A2 are tied to V_{SS} or V_{DD} using a binary coding scheme, so that no two devices with a common I²C-bus slave address have the same hardware subaddress.

8.6 Input filters

To enhance noise immunity in electrically adverse environments, RC low-pass filters are provided on the SDA and SCL lines.

8.7 I²C-bus protocol

Two I²C-bus slave addresses (0111 000 and 0111 001) are used to address the PCF85176. The entire I²C-bus slave address byte is shown in Table 17.

Table 17. I²C slave address byte

	Slave address							
Bit	**7**	**6**	**5**	**4**	**3**	**2**	**1**	**0**
	MSB							**LSB**
	0	1	1	1	0	0	SA0	R/$\overline{W}$

The PCF85176 is a write-only device and is not responding to a read access, therefore bit 0 should always be logic 0. Bit 1 of the slave address byte that a PCF85176 responds to, is defined by the level tied to its SA0 input (V_{SS} for logic 0 and V_{DD} for logic 1).

Having two reserved slave addresses allows the following on the same I²C-bus:

- Up to 16 PCF85176 for very large LCD applications
- The use of two types of LCD multiplex drive modes

The I²C-bus protocol is shown in Figure 21. The sequence is initiated with a START condition (S) from the I²C-bus master which is followed by one of the two possible PCF85176 slave addresses available. All PCF85176 whose SA0 inputs correspond to bit 0 of the slave address respond by asserting an acknowledge in parallel. This I²C-bus transfer is ignored by all PCF85176 whose SA0 inputs are set to the alternative level.

All information provided in this document is subject to legal disclaimers.

© NXP Semiconductors N.V. 2015. All rights reserved.

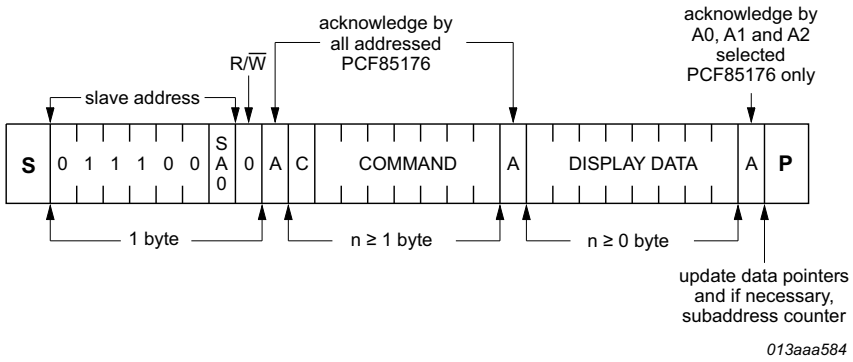

Fig 21. I²C-bus protocol

After an acknowledgement, one or more command bytes follow that define the status of each addressed PCF85176.

The last command byte sent is identified by resetting its most significant bit, continuation bit C (see Figure 22). The command bytes are also acknowledged by all addressed PCF85176 on the bus.

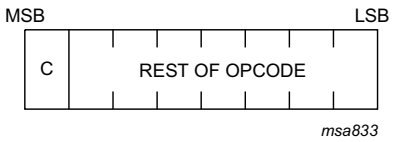

Fig 22. Format of command byte

After the last command byte, one or more display data bytes may follow. Display data bytes are stored in the display RAM at the address specified by the data pointer and the subaddress counter. Both data pointer and subaddress counter are automatically updated and the data directed to the intended PCF85176 device.

An acknowledgement after each byte is asserted only by the PCF85176 that are addressed via address lines A0, A1, and A2. After the last display byte, the I²C-bus master asserts a STOP condition (P). Alternately a START may be asserted to restart an I²C-bus access.

All information provided in this document is subject to legal disclaimers.

© NXP Semiconductors N.V. 2015. All rights reserved.

9. Internal circuitry

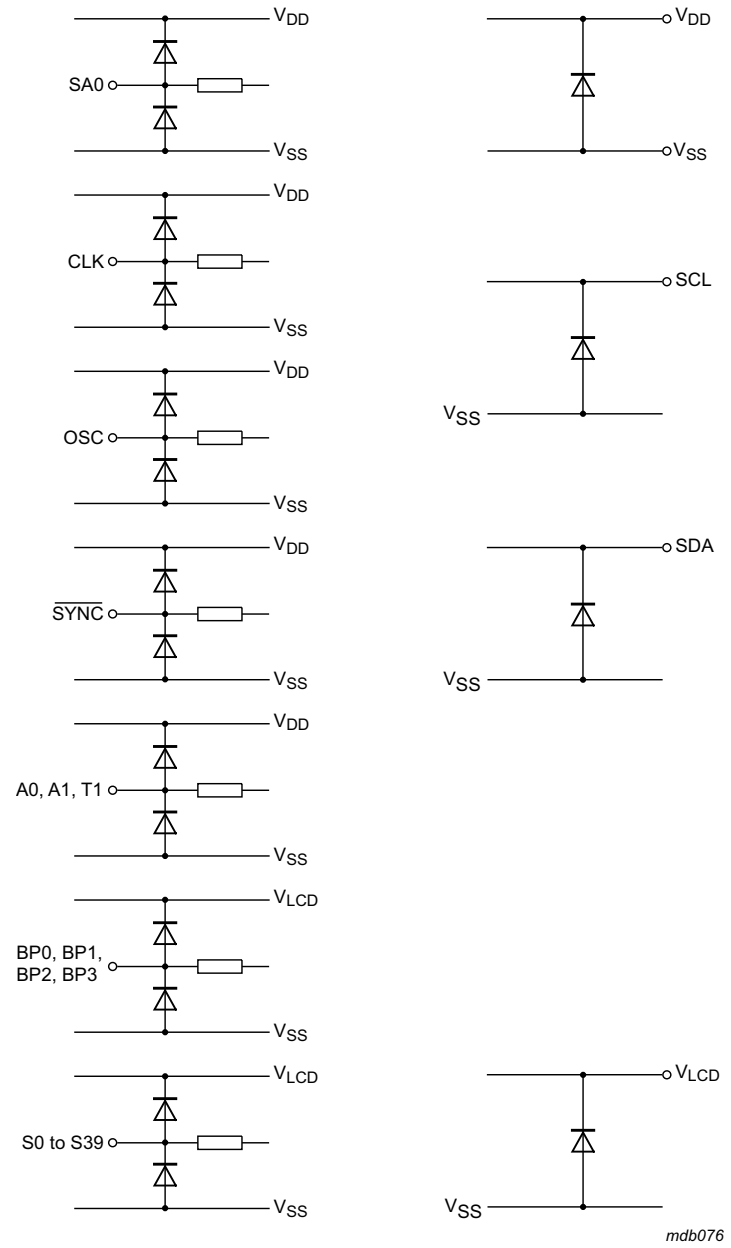

Fig 23. Device protection circuits

All information provided in this document is subject to legal disclaimers.

© NXP Semiconductors N.V. 2015. All rights reserved.

10. Safety notes

CAUTION



This device is sensitive to ElectroStatic Discharge (ESD). Observe precautions for handling electrostatic sensitive devices.

Such precautions are described in the *ANSI/ESD S20.20*, *IEC/ST 61340-5*, *JESD625-A* or equivalent standards.

CAUTION



Static voltages across the liquid crystal display can build up when the LCD supply voltage (V_{LCD}) is on while the IC supply voltage (V_{DD}) is off, or vice versa. This may cause unwanted display artifacts. To avoid such artifacts, V_{LCD} and V_{DD} must be applied or removed together.

11. Limiting values

Table 18. Limiting values

In accordance with the Absolute Maximum Rating System (IEC 60134).

Symbol	Parameter	Conditions	Min	Max	Unit
V_{DD}	supply voltage		–0.5	+6.5	V
V_{LCD}	LCD supply voltage		–0.5	+7.5	V
V_I	input voltage	on each of the pins CLK, SDA, SCL, $\overline{SYNC}$, SA0, OSC, A0 to A2	–0.5	+6.5	V
V_O	output voltage	on each of the pins S0 to S39, BP0 to BP3	–0.5	+7.5	V
I_I	input current		–10	+10	mA
I_O	output current		–10	+10	mA
I_{DD}	supply current		–50	+50	mA
$I_{DD(LCD)}$	LCD supply current		–50	+50	mA
I_{SS}	ground supply current		–50	+50	mA
P_{tot}	total power dissipation		-	400	mW
P_o	output power		-	100	mW
V_{ESD}	electrostatic discharge voltage	HBM [1]	-	±3500	V
		CDM			
		TQFP64 (PCF85176H) [2]	-	±1000	V
		TSSOP56 (PCF85176T) [2]	-	±2000	V
I_{lu}	latch-up current	[3]	-	100	mA
T_{stg}	storage temperature	[4]	–55	+150	°C
T_{amb}	ambient temperature	operating device	–40	+85	°C

[1] Pass level; Human Body Model (HBM), according to Ref. 6 “JESD22-A114”

[2] Pass level; Charged-Device Model (CDM), according to Ref. 7 “JESD22-C101”

[3] Pass level; latch-up testing according to Ref. 8 “JESD78” at maximum ambient temperature ($T_{amb(max)}$).

[4] According to the store and transport requirements (see Ref. 13 “UM10569”) the devices have to be stored at a temperature of +8 °C to +45 °C and a humidity of 25 % to 75 %.

All information provided in this document is subject to legal disclaimers.

© NXP Semiconductors N.V. 2015. All rights reserved.

12. Static characteristics

Table 19. Static characteristics

V_{DD} = 1.8 V to 5.5 V; V_{SS} = 0 V; V_{LCD} = 2.5 V to 6.5 V; T_{amb} = −40 °C to +85 °C; unless otherwise specified.

Symbol	Parameter	Conditions	Min	Typ	Max	Unit
Supplies						
V_{DD}	supply voltage		1.8	-	5.5	V
V_{LCD}	LCD supply voltage	[1]	2.5	-	6.5	V
I_{DD}	supply current	$f_{clk(ext)}$ = 1536 Hz [2][3]	-	3.5	7	µA
		V_{DD} = 3.0 V; T_{amb} = 25 °C	-	2.7	-	µA
$I_{DD(LCD)}$	LCD supply current	$f_{clk(ext)}$ = 1536 Hz [2]	-	23	32	µA
		V_{LCD} = 3.0 V; T_{amb} = 25 °C	-	13	-	µA
Logic[4]						
$V_{P(POR)}$	power-on reset supply voltage		1.0	1.3	1.6	V
V_{IL}	LOW-level input voltage	on pins CLK, $\overline{SYNC}$, OSC, A0 to A2, SA0, SCL, SDA	V_{SS}	-	$0.3V_{DD}$	V
V_{IH}	HIGH-level input voltage	on pins CLK, $\overline{SYNC}$, OSC, A0 to A2, SA0, SCL, SDA [5][6]	$0.7V_{DD}$	-	V_{DD}	V
I_{OL}	LOW-level output current	output sink current; V_{OL} = 0.4 V; V_{DD} = 5 V				
		on pins CLK and $\overline{SYNC}$	1	-	-	mA
		on pin SDA	3	-	-	mA
$I_{OH(CLK)}$	HIGH-level output current on pin CLK	output source current; V_{OH} = 4.6 V; V_{DD} = 5 V	1	-	-	mA
I_L	leakage current	$V_I = V_{DD}$ or V_{SS}; on pins CLK, SCL, SDA, A0 to A2 and SA0	−1	-	+1	µA
$I_{L(OSC)}$	leakage current on pin OSC	$V_I = V_{DD}$	−1	-	+1	µA
C_I	input capacitance	[7]	-	-	7	pF
LCD outputs						
ΔV_O	output voltage variation	on pins BP0 to BP3 and S0 to S39	−100	-	+100	mV
R_O	output resistance	V_{LCD} = 5 V [8]				
		on pins BP0 to BP3	-	1.5	-	kΩ
		on pins S0 to S39	-	6.0	-	kΩ

[1] $V_{LCD} > 3$ V for ⅓ bias.

[2] LCD outputs are open-circuit; inputs at V_{SS} or V_{DD}; external clock with 50 % duty factor; I^2C-bus inactive.

[3] For typical values, see Figure 24.

[4] The I^2C-bus interface of the PCF85176 is 5 V tolerant.

[5] When tested, I^2C pins SCL and SDA have no diode to V_{DD} and may be driven to the V_I limiting values given in Table 18 (see Figure 23 as well).

[6] Propagation delay of driver between clock (CLK) and LCD driving signals.

[7] Periodically sampled, not 100 % tested.

[8] Outputs measured one at a time.

All information provided in this document is subject to legal disclaimers.

© NXP Semiconductors N.V. 2015. All rights reserved.

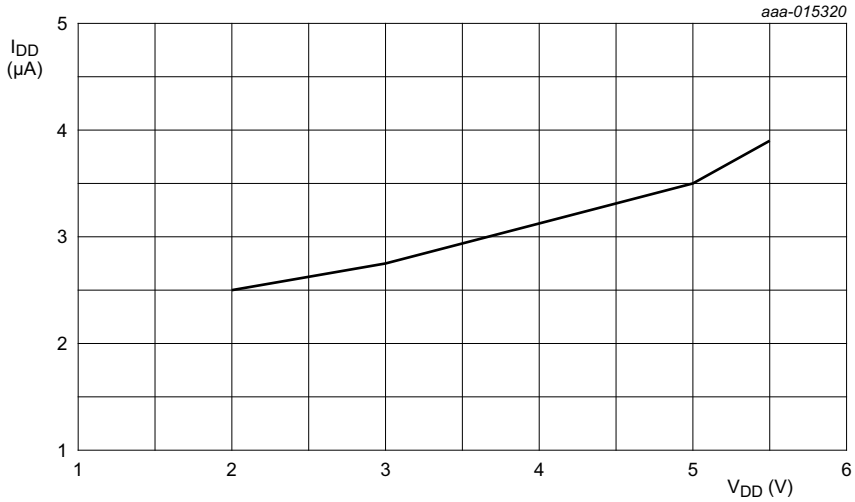

T_{amb} = 30 °C; 1:4 multiplex drive mode; V_{LCD} = 6.5 V; $f_{clk(ext)}$ = 1.536 kHz; all RAM written with logic 1; no display connected; I^2C-bus inactive.

Fig 24. Typical I_{DD} with respect to V_{DD}

All information provided in this document is subject to legal disclaimers.

© NXP Semiconductors N.V. 2015. All rights reserved.

13. Dynamic characteristics

Table 20. Dynamic characteristics

V_{DD} = 1.8 V to 5.5 V; V_{SS} = 0 V; V_{LCD} = 2.5 V to 6.5 V; T_{amb} = −40 °C to +85 °C; unless otherwise specified.

Symbol	Parameter	Conditions	Min	Typ	Max	Unit
Clock						
$f_{clk(int)}$	internal clock frequency	[1]	1440	1850	2640	Hz
$f_{clk(ext)}$	external clock frequency		960	-	2640	Hz
f_{fr}	frame frequency	internal clock	60	77	110	Hz
		external clock	40	-	110	Hz
$t_{clk(H)}$	HIGH-level clock time		60	-	-	µs
$t_{clk(L)}$	LOW-level clock time		60	-	-	µs
Synchronization						
$t_{PD(SYNC_N)}$	$\overline{SYNC}$ propagation delay		-	30	-	ns
t_{SYNC_NL}	$\overline{SYNC}$ LOW time		1	-	-	µs
$t_{PD(drv)}$	driver propagation delay	V_{LCD} = 5 V [2]	-	-	30	µs
I^2C-bus[3]						
Pin SCL						
f_{SCL}	SCL clock frequency		-	-	400	kHz
t_{LOW}	LOW period of the SCL clock		1.3	-	-	µs
t_{HIGH}	HIGH period of the SCL clock		0.6	-	-	µs
Pin SDA						
$t_{SU;DAT}$	data set-up time		100	-	-	ns
$t_{HD;DAT}$	data hold time		0	-	-	ns
Pins SCL and SDA						
t_{BUF}	bus free time between a STOP and START condition		1.3	-	-	µs
$t_{SU;STO}$	set-up time for STOP condition		0.6	-	-	µs
$t_{HD;STA}$	hold time (repeated) START condition		0.6	-	-	µs
$t_{SU;STA}$	set-up time for a repeated START condition		0.6	-	-	µs
t_r	rise time of both SDA and SCL signals	f_{SCL} = 400 kHz	-	-	0.3	µs
		f_{SCL} < 125 kHz	-	-	1.0	µs

All information provided in this document is subject to legal disclaimers.

© NXP Semiconductors N.V. 2015. All rights reserved.

Table 20. Dynamic characteristics *...continued*

V_{DD} = 1.8 V to 5.5 V; V_{SS} = 0 V; V_{LCD} = 2.5 V to 6.5 V; T_{amb} = −40 °C to +85 °C; unless otherwise specified.

Symbol	Parameter	Conditions	Min	Typ	Max	Unit
t_f	fall time of both SDA and SCL signals		-	-	0.3	µs
C_b	capacitive load for each bus line		-	-	400	pF
$t_{w(spike)}$	spike pulse width	on the I²C-bus	-	-	50	ns

[1] Typical output duty factor: 50 % measured at the CLK output pin.

[2] Not tested in production.

[3] All timing values are valid within the operating supply voltage and ambient temperature range and are referenced to V_{IL} and V_{IH} with an input voltage swing of V_{SS} to V_{DD}.

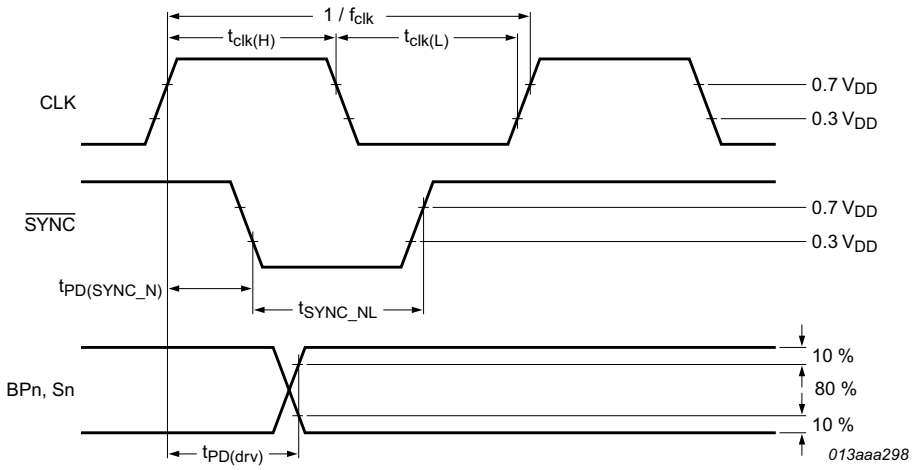

Fig 25. Driver timing waveforms

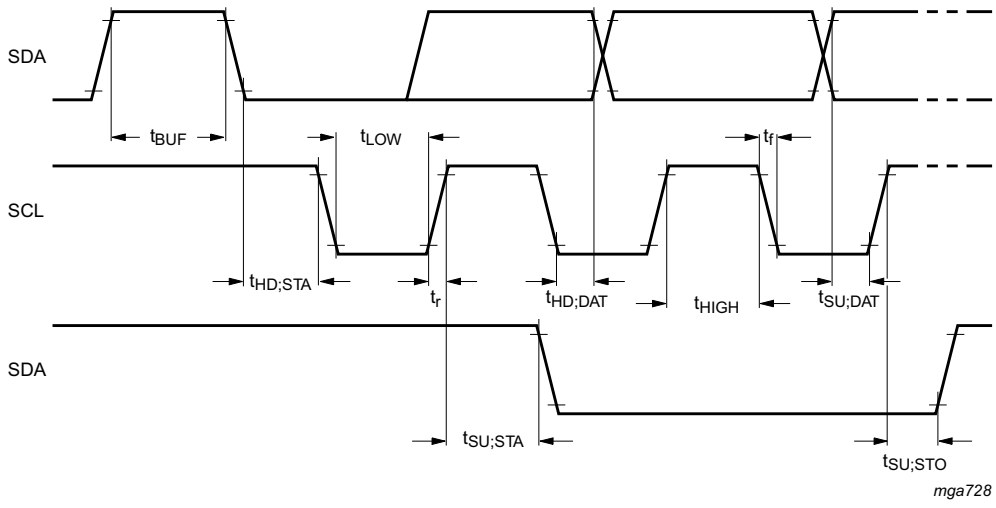

Fig 26. I²C-bus timing waveforms

All information provided in this document is subject to legal disclaimers.

© NXP Semiconductors N.V. 2015. All rights reserved.

14. Application information

14.1 Cascaded operation

Large display configurations of up to 16 PCF85176 can be recognized on the same I^2C-bus by using the 3-bit hardware subaddress (A0, A1, and A2) and the programmable I^2C-bus slave address (SA0).

Table 21. Addressing cascaded PCF85176

Cluster	Bit SA0	Pin A2	Pin A1	Pin A0	Device
1	0	0	0	0	0
		0	0	1	1
		0	1	0	2
		0	1	1	3
		1	0	0	4
		1	0	1	5
		1	1	0	6
		1	1	1	7
2	1	0	0	0	8
		0	0	1	9
		0	1	0	10
		0	1	1	11
		1	0	0	12
		1	0	1	13
		1	1	0	14
		1	1	1	15

When cascaded PCF85176 are synchronized, they can share the backplane signals from one of the devices in the cascade. The other PCF85176 of the cascade contribute additional segment outputs. The backplanes can either be connected together to enhance the drive capability or some can be left open-circuit (such as the ones from the slave in Figure 27) or just some of the master and some of the slave an be taken to facilitate the layout of the display.

All information provided in this document is subject to legal disclaimers.

© NXP Semiconductors N.V. 2015. All rights reserved.

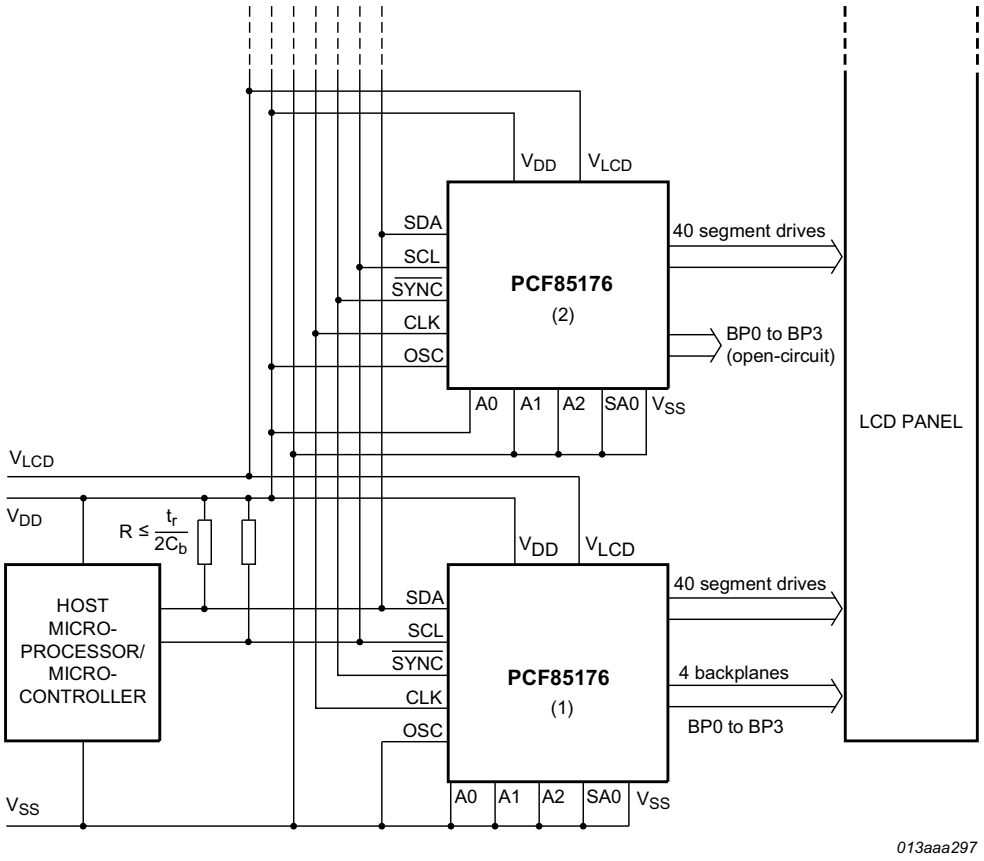

(1) Is master (OSC connected to V_{SS}).

(2) Is slave (OSC connected to V_{DD}).

Fig 27. Cascaded PCF85176 configuration

The $\overline{SYNC}$ line is provided to maintain the correct synchronization between all cascaded PCF85176. Synchronization is guaranteed after a power-on reset. The only time that $\overline{SYNC}$ is likely to be needed is if synchronization is accidentally lost (e.g. by noise in adverse electrical environments or by defining a multiplex drive mode when PCF85176 with different SA0 levels are cascaded).

$\overline{SYNC}$ is organized as an input/output pin. The output selection is realized as an open-drain driver with an internal pull-up resistor. A PCF85176 asserts the $\overline{SYNC}$ line at the onset of its last active backplane signal and monitors the $\overline{SYNC}$ line at all other times. If synchronization in the cascade is lost, it is restored by the first PCF85176 to assert $\overline{SYNC}$. The timing relationship between the backplane waveforms and the $\overline{SYNC}$ signal for the various drive modes of the PCF85176 are shown in Figure 28.

The PCF85176 can always be cascaded with other devices of the same type or conditionally with other devices of the same family. This allows optimal drive selection for a given number of pixels to display. Figure 25 and Figure 28 show the timing of the synchronization signals.

Only one master but multiple slaves are allowed in a cascade. All devices in the cascade have to use the same clock whether it is supplied externally or provided by the master.

All information provided in this document is subject to legal disclaimers.

© NXP Semiconductors N.V. 2015. All rights reserved.

If an external clock source is used, all PCF85176 in the cascade must be configured such as to receive the clock from that external source (pin OSC connected to V_{DD}). Thereby it must be ensured that the clock tree is designed such that on all PCF85176 the clock propagation delay from the clock source to all PCF85176 in the cascade is as equal as possible since otherwise synchronization artefacts may occur.

In mixed cascading configurations, care has to be taken that the specifications of the individual cascaded devices are met at all times.

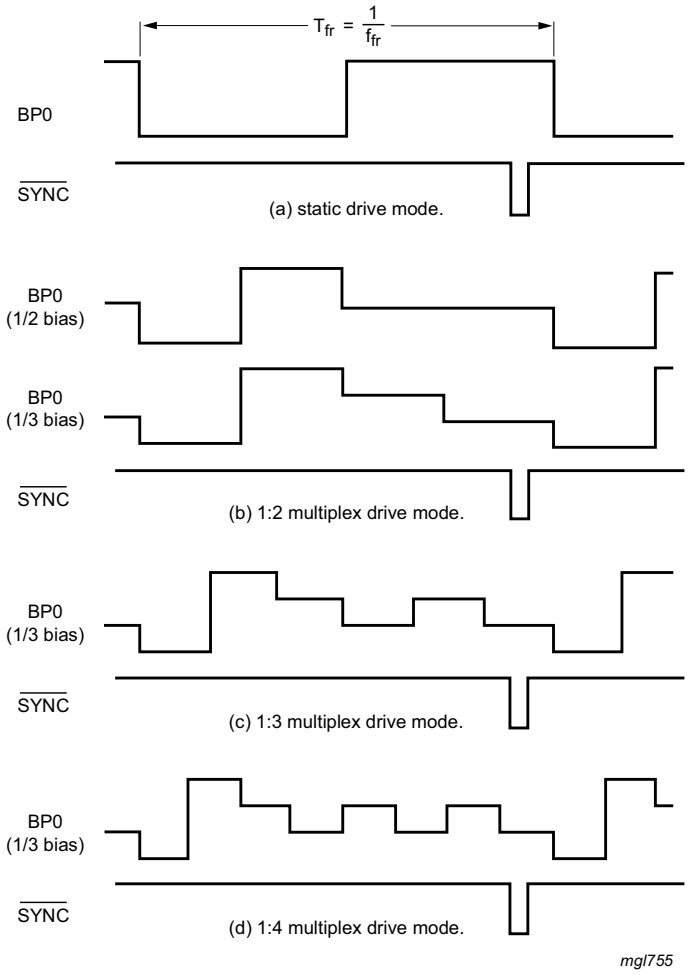

Fig 28. Synchronization of the cascade for the various PCF85176 drive modes

All information provided in this document is subject to legal disclaimers.

© NXP Semiconductors N.V. 2015. All rights reserved.

15. Package outline

TQFP64: plastic thin quad flat package; 64 leads; body 10 x 10 x 1.0 mm **SOT357-1**

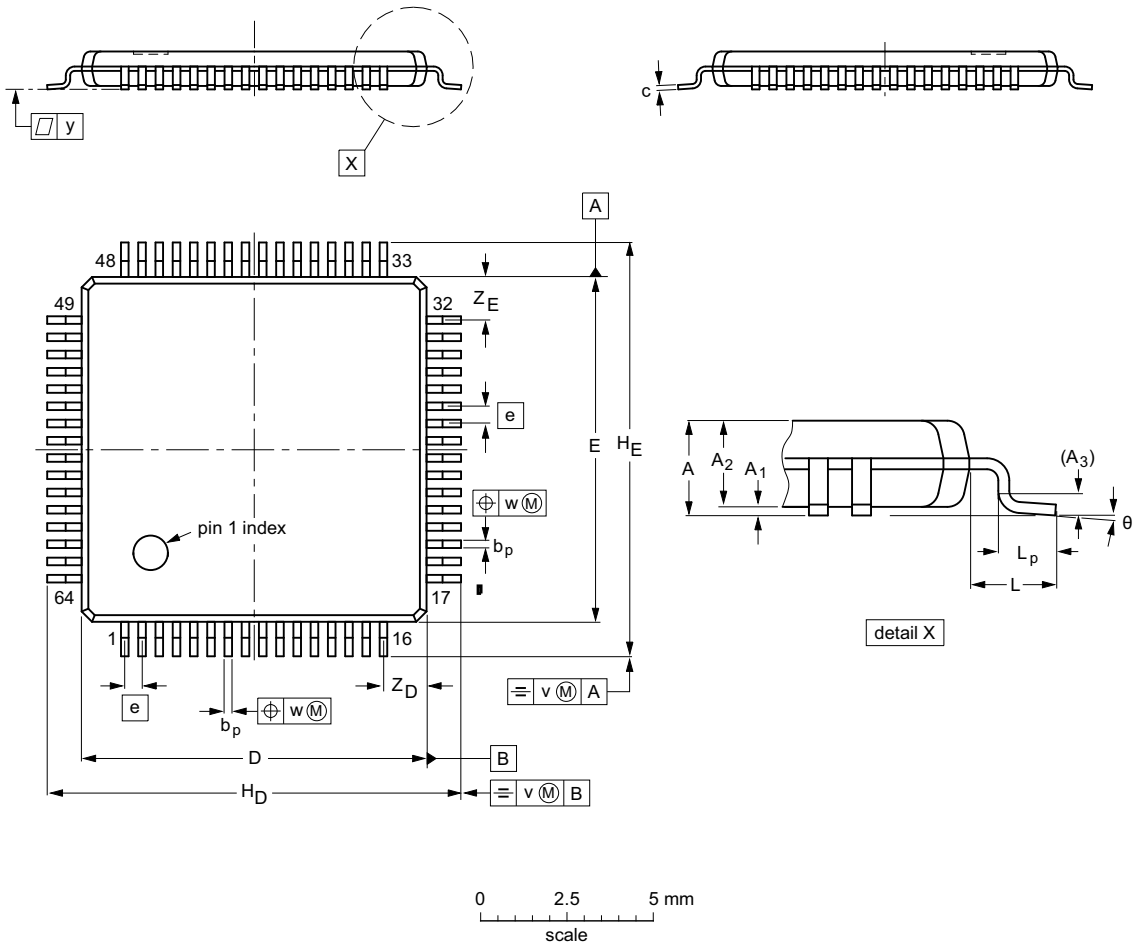

DIMENSIONS (mm are the original dimensions)

UNIT	A max.	A_1	A_2	A_3	b_p	c	$D^{(1)}$	$E^{(1)}$	e	H_D	H_E	L	L_p	v	w	y	$Z_D^{(1)}$	$Z_E^{(1)}$	θ
mm	1.2	0.15 0.05	1.05 0.95	0.25	0.27 0.17	0.18 0.12	10.1 9.9	10.1 9.9	0.5	12.15 11.85	12.15 11.85	1	0.75 0.45	0.2	0.08	0.1	1.45 1.05	1.45 1.05	7° 0°

Note

1. Plastic or metal protrusions of 0.25 mm maximum per side are not included.

OUTLINE VERSION	REFERENCES				EUROPEAN PROJECTION	ISSUE DATE
	IEC	JEDEC	JEITA			
SOT357-1	137E10	MS-026				~~00-01-19~~ 02-03-14

Fig 29. Package outline SOT357-1 (TQFP64) of PCF85176H

All information provided in this document is subject to legal disclaimers.

© NXP Semiconductors N.V. 2015. All rights reserved.

TSSOP56: plastic thin shrink small outline package; 56 leads; body width 6.1 mm **SOT364-1**

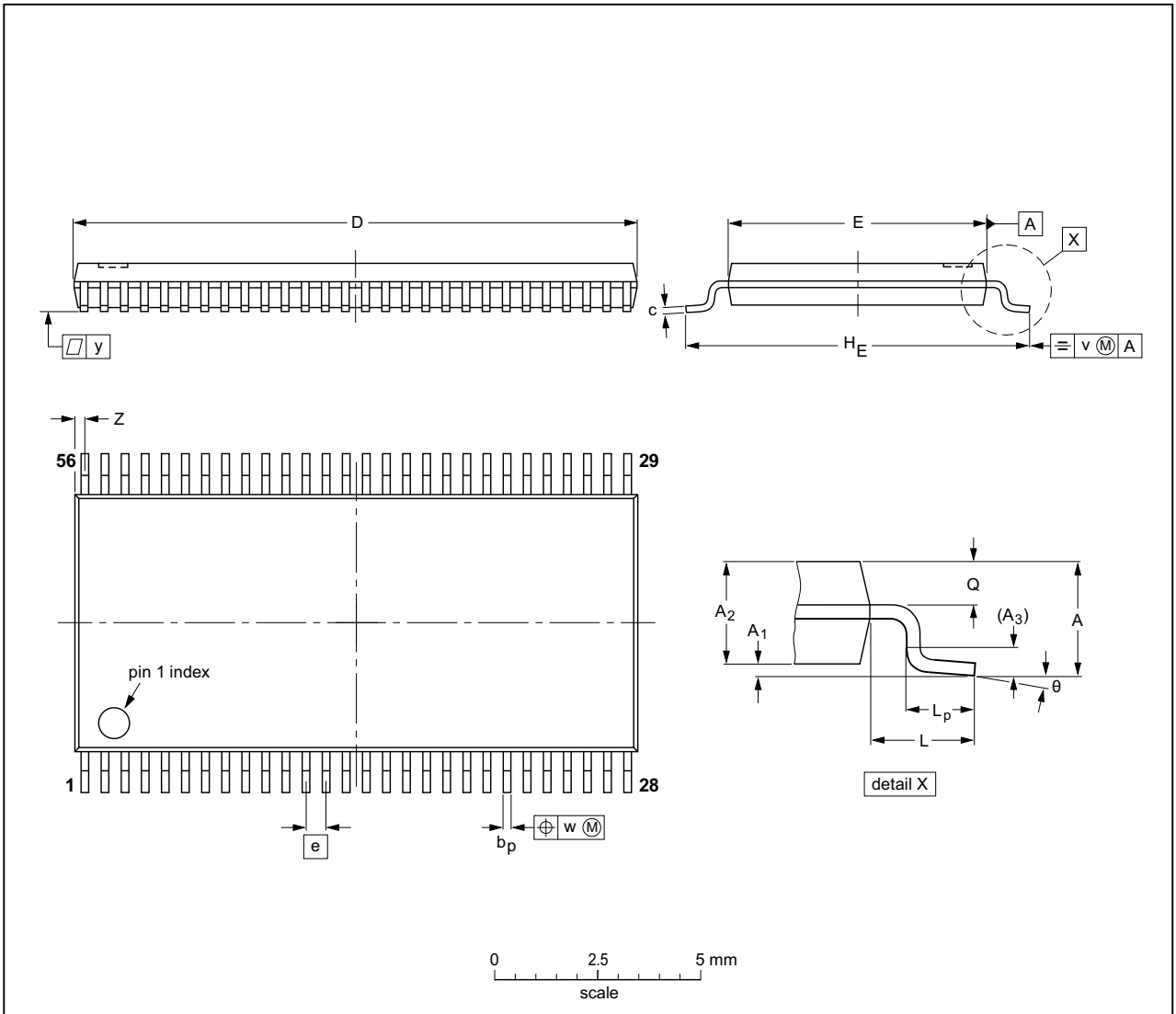

DIMENSIONS (mm are the original dimensions).

UNIT	A max.	A_1	A_2	A_3	b_p	c	$D^{(1)}$	$E^{(2)}$	e	H_E	L	L_p	Q	v	w	y	Z	θ
mm	1.2	0.15 0.05	1.05 0.85	0.25	0.28 0.17	**0.2** **0.1**	14.1 13.9	6.2 6.0	0.5	8.3 7.9	1	0.8 0.4	0.50 0.35	0.25	0.08	0.1	0.5 0.1	8° 0°

Notes

1. Plastic or metal protrusions of 0.15 mm maximum per side are not included.
2. Plastic interlead protrusions of 0.25 mm maximum per side are not included.

OUTLINE VERSION	REFERENCES				EUROPEAN PROJECTION	ISSUE DATE
	IEC	JEDEC	JEITA			
SOT364-1		MO-153				~~99-12-27~~ 03-02-19

Fig 30. Package outline SOT364-1 (TSSOP56) of PCF85176T

All information provided in this document is subject to legal disclaimers.

© NXP Semiconductors N.V. 2015. All rights reserved.

16. Handling information

All input and output pins are protected against ElectroStatic Discharge (ESD) under normal handling. When handling Metal-Oxide Semiconductor (MOS) devices ensure that all normal precautions are taken as described in *JESD625-A*, *IEC 61340-5* or equivalent standards.

All information provided in this document is subject to legal disclaimers.

© NXP Semiconductors N.V. 2015. All rights reserved.

17. Packing information

17.1 Tape and reel information

For tape and reel packing information, see Ref. 10 “SOT357-1_518” and Ref. 11 “SOT364-1_118” on page 52.

18. Soldering of SMD packages

This text provides a very brief insight into a complex technology. A more in-depth account of soldering ICs can be found in Application Note *AN10365 “Surface mount reflow soldering description”*.

18.1 Introduction to soldering

Soldering is one of the most common methods through which packages are attached to Printed Circuit Boards (PCBs), to form electrical circuits. The soldered joint provides both the mechanical and the electrical connection. There is no single soldering method that is ideal for all IC packages. Wave soldering is often preferred when through-hole and Surface Mount Devices (SMDs) are mixed on one printed wiring board; however, it is not suitable for fine pitch SMDs. Reflow soldering is ideal for the small pitches and high densities that come with increased miniaturization.

18.2 Wave and reflow soldering

Wave soldering is a joining technology in which the joints are made by solder coming from a standing wave of liquid solder. The wave soldering process is suitable for the following:

- Through-hole components
- Leaded or leadless SMDs, which are glued to the surface of the printed circuit board

Not all SMDs can be wave soldered. Packages with solder balls, and some leadless packages which have solder lands underneath the body, cannot be wave soldered. Also, leaded SMDs with leads having a pitch smaller than ~0.6 mm cannot be wave soldered, due to an increased probability of bridging.

The reflow soldering process involves applying solder paste to a board, followed by component placement and exposure to a temperature profile. Leaded packages, packages with solder balls, and leadless packages are all reflow solderable.

Key characteristics in both wave and reflow soldering are:

- Board specifications, including the board finish, solder masks and vias
- Package footprints, including solder thieves and orientation
- The moisture sensitivity level of the packages
- Package placement
- Inspection and repair
- Lead-free soldering versus SnPb soldering

All information provided in this document is subject to legal disclaimers.

© NXP Semiconductors N.V. 2015. All rights reserved.

18.3 Wave soldering

Key characteristics in wave soldering are:

- Process issues, such as application of adhesive and flux, clinching of leads, board transport, the solder wave parameters, and the time during which components are exposed to the wave
- Solder bath specifications, including temperature and impurities

18.4 Reflow soldering

Key characteristics in reflow soldering are:

- Lead-free versus SnPb soldering; note that a lead-free reflow process usually leads to higher minimum peak temperatures (see Figure 31) than a SnPb process, thus reducing the process window
- Solder paste printing issues including smearing, release, and adjusting the process window for a mix of large and small components on one board
- Reflow temperature profile; this profile includes preheat, reflow (in which the board is heated to the peak temperature) and cooling down. It is imperative that the peak temperature is high enough for the solder to make reliable solder joints (a solder paste characteristic). In addition, the peak temperature must be low enough that the packages and/or boards are not damaged. The peak temperature of the package depends on package thickness and volume and is classified in accordance with Table 22 and 23

Table 22. SnPb eutectic process (from J-STD-020D)

Package thickness (mm)	Package reflow temperature (°C)	
	Volume (mm^3)	
	< 350	≥ 350
< 2.5	235	220
≥ 2.5	220	220

Table 23. Lead-free process (from J-STD-020D)

Package thickness (mm)	Package reflow temperature (°C)		
	Volume (mm^3)		
	< 350	350 to 2000	> 2000
< 1.6	260	260	260
1.6 to 2.5	260	250	245
> 2.5	250	245	245

Moisture sensitivity precautions, as indicated on the packing, must be respected at all times.

Studies have shown that small packages reach higher temperatures during reflow soldering, see Figure 31.

All information provided in this document is subject to legal disclaimers.

© NXP Semiconductors N.V. 2015. All rights reserved.

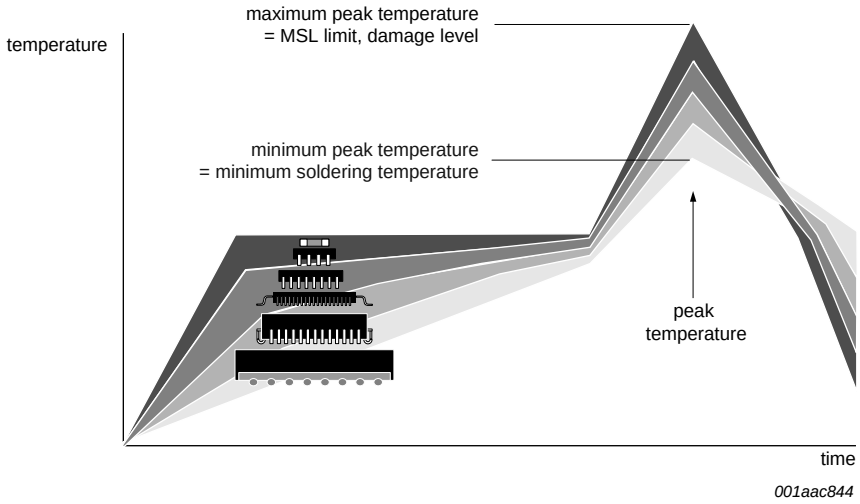

MSL: Moisture Sensitivity Level

Fig 31. Temperature profiles for large and small components

For further information on temperature profiles, refer to Application Note *AN10365 "Surface mount reflow soldering description"*.

All information provided in this document is subject to legal disclaimers.

© NXP Semiconductors N.V. 2015. All rights reserved.

19. Footprint information

Footprint information for reflow soldering of TQFP64 package **SOT357-1**

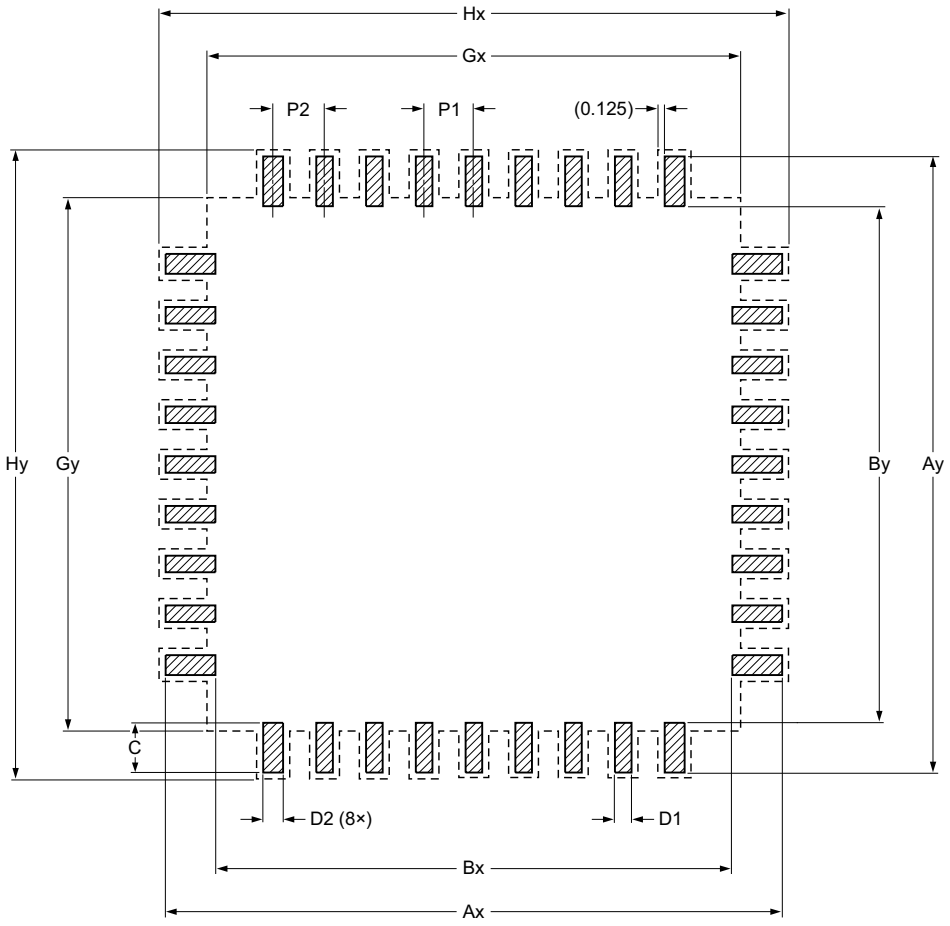

Generic footprint pattern

Refer to the package outline drawing for actual layout

solder land

occupied area

DIMENSIONS in mm

P1	P2	Ax	Ay	Bx	By	C	D1	D2	Gx	Gy	Hx	Hy
0.500	0.560	13.300	13.300	10.300	10.300	1.500	0.280	0.400	10.500	10.500	13.550	13.550

sot357-1_fr

Fig 32. Footprint information for reflow soldering of SOT357-1 (TQFP64) of PCF85176H

All information provided in this document is subject to legal disclaimers.

© NXP Semiconductors N.V. 2015. All rights reserved.

Footprint information for reflow soldering of TSSOP56 package **SOT364-1**

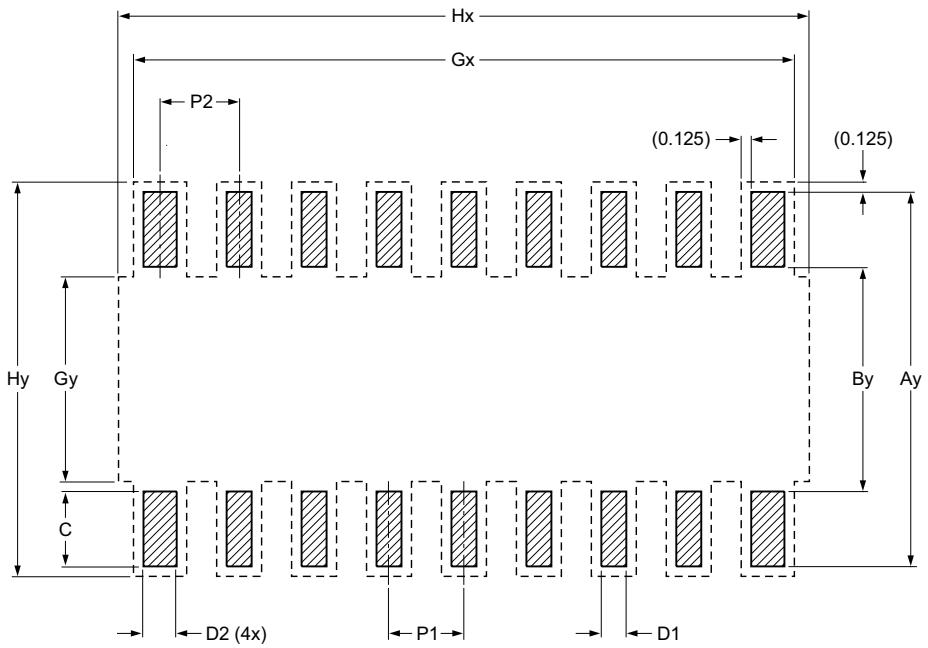

Generic footprint pattern

Refer to the package outline drawing for actual layout



solder land

occupied area

DIMENSIONS in mm

P1	P2	Ay	By	C	D1	D2	Gx	Gy	Hx	Hy
0.500	0.560	8.900	6.100	1.400	0.280	0.400	14.270	7.000	16.600	9.150

sot364-1_fr

Fig 33. Footprint information for reflow soldering of SOT364-1 (TSSOP56) of PCF85176T

All information provided in this document is subject to legal disclaimers.

© NXP Semiconductors N.V. 2015. All rights reserved.

20. Appendix

20.1 LCD segment driver selection

Table 24. Selection of LCD segment drivers

Type name	Number of elements at MUX							V_{DD} (V)	V_{LCD} (V)	f_{fr} (Hz)	V_{LCD} (V) charge pump	V_{LCD} (V) temperature compensat.	T_{amb} (°C)	Interface	Package	AEC-Q100
	1:1	1:2	1:3	1:4	1:6	1:8	1:9									
PCA8553DTT	40	80	120	160	-	-	-	1.8 to 5.5	1.8 to 5.5	32 to 256[1]	N	N	–40 to 105	I^2C / SPI	TSSOP56	Y
PCA8546ATT	-	-	-	176	-	-	-	1.8 to 5.5	2.5 to 9	60 to 300[1]	N	N	–40 to 95	I^2C	TSSOP56	Y
PCA8546BTT	-	-	-	176	-	-	-	1.8 to 5.5	2.5 to 9	60 to 300[1]	N	N	–40 to 95	SPI	TSSOP56	Y
PCA8547AHT	44	88	-	176	-	-	-	1.8 to 5.5	2.5 to 9	60 to 300[1]	Y	Y	–40 to 95	I^2C	TQFP64	Y
PCA8547BHT	44	88	-	176	-	-	-	1.8 to 5.5	2.5 to 9	60 to 300[1]	Y	Y	–40 to 95	SPI	TQFP64	Y
PCF85134HL	60	120	180	240	-	-	-	1.8 to 5.5	2.5 to 6.5	82	N	N	–40 to 85	I^2C	LQFP80	N
PCA85134H	60	120	180	240	-	-	-	1.8 to 5.5	2.5 to 8	82	N	N	–40 to 95	I^2C	LQFP80	Y
PCA8543AHL	60	120	-	240	-	-	-	2.5 to 5.5	2.5 to 9	60 to 300[1]	Y	Y	–40 to 105	I^2C	LQFP80	Y
PCF8545ATT	-	-	-	176	252	320	-	1.8 to 5.5	2.5 to 5.5	60 to 300[1]	N	N	–40 to 85	I^2C	TSSOP56	N
PCF8545BTT	-	-	-	176	252	320	-	1.8 to 5.5	2.5 to 5.5	60 to 300[1]	N	N	–40 to 85	SPI	TSSOP56	N
PCF8536AT	-	-	-	176	252	320	-	1.8 to 5.5	2.5 to 9	60 to 300[1]	N	N	–40 to 85	I^2C	TSSOP56	N
PCF8536BT	-	-	-	176	252	320	-	1.8 to 5.5	2.5 to 9	60 to 300[1]	N	N	–40 to 85	SPI	TSSOP56	N
PCA8536AT	-	-	-	176	252	320	-	1.8 to 5.5	2.5 to 9	60 to 300[1]	N	N	–40 to 95	I^2C	TSSOP56	Y
PCA8536BT	-	-	-	176	252	320	-	1.8 to 5.5	2.5 to 9	60 to 300[1]	N	N	–40 to 95	SPI	TSSOP56	Y
PCF8537AH	44	88	-	176	276	352	-	1.8 to 5.5	2.5 to 9	60 to 300[1]	Y	Y	–40 to 85	I^2C	TQFP64	N
PCF8537BH	44	88	-	176	276	352	-	1.8 to 5.5	2.5 to 9	60 to 300[1]	Y	Y	–40 to 85	SPI	TQFP64	N
PCA8537AH	44	88	-	176	276	352	-	1.8 to 5.5	2.5 to 9	60 to 300[1]	Y	Y	–40 to 95	I^2C	TQFP64	Y
PCA8537BH	44	88	-	176	276	352	-	1.8 to 5.5	2.5 to 9	60 to 300[1]	Y	Y	–40 to 95	SPI	TQFP64	Y
PCA9620H	60	120	-	240	320	480	-	2.5 to 5.5	2.5 to 9	60 to 300[1]	Y	Y	–40 to 105	I^2C	LQFP80	Y
PCA9620U	60	120	-	240	320	480	-	2.5 to 5.5	2.5 to 9	60 to 300[1]	Y	Y	–40 to 105	I^2C	Bare die	Y
PCF8576DU	40	80	120	160	-	-	-	1.8 to 5.5	2.5 to 6.5	77	N	N	–40 to 85	I^2C	Bare die	N
PCF8576EUG	40	80	120	160	-	-	-	1.8 to 5.5	2.5 to 6.5	77	N	N	–40 to 85	I^2C	Bare die	N
PCA8576FUG	40	80	120	160	-	-	-	1.8 to 5.5	2.5 to 8	200	N	N	–40 to 105	I^2C	Bare die	Y
PCF85133U	80	160	240	320	-	-	-	1.8 to 5.5	2.5 to 6.5	82, 110[2]	N	N	–40 to 85	I^2C	Bare die	N
PCA85133U	80	160	240	320	-	-	-	1.8 to 5.5	2.5 to 8	82, 110[2]	N	N	–40 to 95	I^2C	Bare die	Y

All information provided in this document is subject to legal disclaimers.

© NXP Semiconductors N.V. 2015. All rights reserved.

Table 24. Selection of LCD segment drivers *...continued*

Type name	Number of elements at MUX							V_{DD} (V)	V_{LCD} (V)	f_{fr} (Hz)	V_{LCD} (V) charge pump	V_{LCD} (V) temperature compensat.	T_{amb} (°C)	Interface	Package	AEC-Q100
	1:1	1:2	1:3	1:4	1:6	1:8	1:9									
PCA85233UG	80	160	240	320	-	-	-	1.8 to 5.5	2.5 to 8	150, 220[2]	N	N	–40 to 105	I^2C	Bare die	Y
PCF85132U	160	320	480	640	-	-	-	1.8 to 5.5	1.8 to 8	60 to 90[1]	N	N	–40 to 85	I^2C	Bare die	N
PCA8530DUG	102	204	-	408	-	-	-	2.5 to 5.5	4 to 12	45 to 300[1]	Y	Y	–40 to 105	I^2C / SPI	Bare die	Y
PCA85132U	160	320	480	640	-	-	-	1.8 to 5.5	1.8 to 8	60 to 90[1]	N	N	–40 to 95	I^2C	Bare die	Y
PCA85232U	160	320	480	640	-	-	-	1.8 to 5.5	1.8 to 8	117 to 176[1]	N	N	–40 to 95	I^2C	Bare die	Y
PCF8538UG	102	204	-	408	612	816	918	2.5 to 5.5	4 to 12	45 to 300[1]	Y	Y	–40 to 85	I^2C / SPI	Bare die	N
PCA8538UG	102	204	-	408	612	816	918	2.5 to 5.5	4 to 12	45 to 300[1]	Y	Y	–40 to 105	I^2C / SPI	Bare die	Y

[1] Software programmable.

[2] Hardware selectable.

All information provided in this document is subject to legal disclaimers.

© NXP Semiconductors N.V. 2015. All rights reserved.

21. Abbreviations

Table 25. Abbreviations

Acronym	Description
CMOS	Complementary Metal-Oxide Semiconductor
CDM	Charged Device Model
DC	Direct Current
HBM	Human Body Model
I^2C	Inter-Integrated Circuit
IC	Integrated Circuit
LCD	Liquid Crystal Display
LSB	Least Significant Bit
MSB	Most Significant Bit
MSL	Moisture Sensitivity Level
PCB	Printed-Circuit Board
POR	Power-On Reset
RAM	Random Access Memory
RC	Resistance and Capacitance
RMS	Root Mean Square
SCL	Serial CLock line
SDA	Serial DAta Line
SMD	Surface-Mount Device

All information provided in this document is subject to legal disclaimers.

© NXP Semiconductors N.V. 2015. All rights reserved.

22. References

[1] **AN10365 —** Surface mount reflow soldering description

[2] **AN10853 —** ESD and EMC sensitivity of IC

[3] **IEC 60134 —** Rating systems for electronic tubes and valves and analogous semiconductor devices

[4] **IEC 61340-5 —** Protection of electronic devices from electrostatic phenomena

[5] **IPC/JEDEC J-STD-020D —** Moisture/Reflow Sensitivity Classification for Nonhermetic Solid State Surface Mount Devices

[6] **JESD22-A114 —** Electrostatic Discharge (ESD) Sensitivity Testing Human Body Model (HBM)

[7] **JESD22-C101 —** Field-Induced Charged-Device Model Test Method for Electrostatic-Discharge-Withstand Thresholds of Microelectronic Components

[8] **JESD78 —** IC Latch-Up Test

[9] **JESD625-A —** Requirements for Handling Electrostatic-Discharge-Sensitive (ESDS) Devices

[10] **SOT357-1_518 —** TSSOP64; Reel pack; SMD, 13", packing information

[11] **SOT364-1_118 —** TSSOP56; Reel pack; SMD, 13", packing information

[12] **UM10204 —** I^2C-bus specification and user manual

[13] **UM10569 —** Store and transport requirements

23. Revision history

Table 26. Revision history

Document ID	Release date	Data sheet status	Change notice	Supersedes
PCF85176 v.5	20150106	Product data sheet	-	PCF85176 v.4
Modifications:	• The format of this data sheet has been redesigned to comply with the new identity guidelines of NXP Semiconductors. • Legal texts have been adapted to the new company name where appropriate. • Adjusted ESD values in Table 18 • Changed $I_{DD(LCD)}$ values in Table 19 • Changed $f_{clk(int)}$ typical value in Table 20 • Changed Section 17.1 • Adjusted Figure 24			
PCF85176 v.4	20130610	Product data sheet	-	PCF85176 v.3
PCF85176 v.3	20120905	Product data sheet	-	PCF85176 v.2
PCF85176 v.2	20110627	Product data sheet	-	PCF85176 v.1
PCF85176 v.1	20100414	Product data sheet	-	-

All information provided in this document is subject to legal disclaimers.

© NXP Semiconductors N.V. 2015. All rights reserved.

24. Legal information

24.1 Data sheet status

Document status[1][2]	Product status[3]	Definition
Objective [short] data sheet	Development	This document contains data from the objective specification for product development.
Preliminary [short] data sheet	Qualification	This document contains data from the preliminary specification.
Product [short] data sheet	Production	This document contains the product specification.

[1] Please consult the most recently issued document before initiating or completing a design.

[2] The term 'short data sheet' is explained in section "Definitions".

[3] The product status of device(s) described in this document may have changed since this document was published and may differ in case of multiple devices. The latest product status information is available on the Internet at URL http://www.nxp.com.

24.2 Definitions

Draft — The document is a draft version only. The content is still under internal review and subject to formal approval, which may result in modifications or additions. NXP Semiconductors does not give any representations or warranties as to the accuracy or completeness of information included herein and shall have no liability for the consequences of use of such information.

Short data sheet — A short data sheet is an extract from a full data sheet with the same product type number(s) and title. A short data sheet is intended for quick reference only and should not be relied upon to contain detailed and full information. For detailed and full information see the relevant full data sheet, which is available on request via the local NXP Semiconductors sales office. In case of any inconsistency or conflict with the short data sheet, the full data sheet shall prevail.

Product specification — The information and data provided in a Product data sheet shall define the specification of the product as agreed between NXP Semiconductors and its customer, unless NXP Semiconductors and customer have explicitly agreed otherwise in writing. In no event however, shall an agreement be valid in which the NXP Semiconductors product is deemed to offer functions and qualities beyond those described in the Product data sheet.

24.3 Disclaimers

Limited warranty and liability — Information in this document is believed to be accurate and reliable. However, NXP Semiconductors does not give any representations or warranties, expressed or implied, as to the accuracy or completeness of such information and shall have no liability for the consequences of use of such information. NXP Semiconductors takes no responsibility for the content in this document if provided by an information source outside of NXP Semiconductors.

In no event shall NXP Semiconductors be liable for any indirect, incidental, punitive, special or consequential damages (including - without limitation - lost profits, lost savings, business interruption, costs related to the removal or replacement of any products or rework charges) whether or not such damages are based on tort (including negligence), warranty, breach of contract or any other legal theory.

Notwithstanding any damages that customer might incur for any reason whatsoever, NXP Semiconductors' aggregate and cumulative liability towards customer for the products described herein shall be limited in accordance with the *Terms and conditions of commercial sale* of NXP Semiconductors.

Right to make changes — NXP Semiconductors reserves the right to make changes to information published in this document, including without limitation specifications and product descriptions, at any time and without notice. This document supersedes and replaces all information supplied prior to the publication hereof.

Suitability for use in automotive applications — This NXP Semiconductors product has been qualified for use in automotive applications. Unless otherwise agreed in writing, the product is not designed, authorized or warranted to be suitable for use in life support, life-critical or safety-critical systems or equipment, nor in applications where failure or malfunction of an NXP Semiconductors product can reasonably be expected to result in personal injury, death or severe property or environmental damage. NXP Semiconductors and its suppliers accept no liability for inclusion and/or use of NXP Semiconductors products in such equipment or applications and therefore such inclusion and/or use is at the customer's own risk.

Applications — Applications that are described herein for any of these products are for illustrative purposes only. NXP Semiconductors makes no representation or warranty that such applications will be suitable for the specified use without further testing or modification.

Customers are responsible for the design and operation of their applications and products using NXP Semiconductors products, and NXP Semiconductors accepts no liability for any assistance with applications or customer product design. It is customer's sole responsibility to determine whether the NXP Semiconductors product is suitable and fit for the customer's applications and products planned, as well as for the planned application and use of customer's third party customer(s). Customers should provide appropriate design and operating safeguards to minimize the risks associated with their applications and products.

NXP Semiconductors does not accept any liability related to any default, damage, costs or problem which is based on any weakness or default in the customer's applications or products, or the application or use by customer's third party customer(s). Customer is responsible for doing all necessary testing for the customer's applications and products using NXP Semiconductors products in order to avoid a default of the applications and the products or of the application or use by customer's third party customer(s). NXP does not accept any liability in this respect.

Limiting values — Stress above one or more limiting values (as defined in the Absolute Maximum Ratings System of IEC 60134) will cause permanent damage to the device. Limiting values are stress ratings only and (proper) operation of the device at these or any other conditions above those given in the Recommended operating conditions section (if present) or the Characteristics sections of this document is not warranted. Constant or repeated exposure to limiting values will permanently and irreversibly affect the quality and reliability of the device.

Terms and conditions of commercial sale — NXP Semiconductors products are sold subject to the general terms and conditions of commercial sale, as published at http://www.nxp.com/profile/terms, unless otherwise agreed in a valid written individual agreement. In case an individual agreement is concluded only the terms and conditions of the respective agreement shall apply. NXP Semiconductors hereby expressly objects to applying the customer's general terms and conditions with regard to the purchase of NXP Semiconductors products by customer.

All information provided in this document is subject to legal disclaimers.

© NXP Semiconductors N.V. 2015. All rights reserved.

No offer to sell or license — Nothing in this document may be interpreted or construed as an offer to sell products that is open for acceptance or the grant, conveyance or implication of any license under any copyrights, patents or other industrial or intellectual property rights.

Export control — This document as well as the item(s) described herein may be subject to export control regulations. Export might require a prior authorization from competent authorities.

Translations — A non-English (translated) version of a document is for reference only. The English version shall prevail in case of any discrepancy between the translated and English versions.

24.4 Trademarks

Notice: All referenced brands, product names, service names and trademarks are the property of their respective owners.

I^2C-bus — logo is a trademark of NXP Semiconductors N.V.

25. Contact information

For more information, please visit: **http://www.nxp.com**

For sales office addresses, please send an email to: **salesaddresses@nxp.com**

All information provided in this document is subject to legal disclaimers.

© NXP Semiconductors N.V. 2015. All rights reserved.

26. Tables

Table 1. Ordering information 2
Table 2. Ordering options 2
Table 3. Marking codes 2
Table 4. Pin description 5
Table 5. Definition of PCF85176 commands 6
Table 6. C bit description 6
Table 7. Mode-set command bit description 7
Table 8. Load-data-pointer command bit description 7
Table 9. Device-select command bit description 8
Table 10. Bank-select command bit description 8
Table 11. Blink-select command bit description 9
Table 12. Blink frequencies 10
Table 13. Selection of possible display configurations . . . 11
Table 14. Biasing characteristics 12
Table 15. Standard RAM filling in 1:3 multiplex drive mode 24
Table 16. Entire RAM filling by rewriting in 1:3 multiplex drive mode 24
Table 17. I^2C slave address byte 30
Table 18. Limiting values 33
Table 19. Static characteristics 34
Table 20. Dynamic characteristics 36
Table 21. Addressing cascaded PCF85176 38
Table 22. SnPb eutectic process (from J-STD-020D) . . .45
Table 23. Lead-free process (from J-STD-020D) 45
Table 24. Selection of LCD segment drivers 49
Table 25. Abbreviations 51
Table 26. Revision history 52

All information provided in this document is subject to legal disclaimers.

© NXP Semiconductors N.V. 2015. All rights reserved.

27. Figures

Fig 1. Block diagram of PCF85176 3
Fig 2. Pinning diagram for TQFP64 (PCF85176H) 4
Fig 3. Pinning diagram for TSSOP56 (PCF85176T) 4
Fig 4. Example of displays suitable for PCF85176 11
Fig 5. Typical system configuration 12
Fig 6. Electro-optical characteristic: relative transmission curve of the liquid 14
Fig 7. Static drive mode waveforms 15
Fig 8. Waveforms for the 1:2 multiplex drive mode with $\frac{1}{2}$ bias 16
Fig 9. Waveforms for the 1:2 multiplex drive mode with $\frac{1}{3}$ bias 17
Fig 10. Waveforms for the 1:3 multiplex drive mode with $\frac{1}{3}$ bias 18
Fig 11. Waveforms for the 1:4 multiplex drive mode with $\frac{1}{3}$ bias 19
Fig 12. Display RAM bitmap 21
Fig 13. Relationship between LCD layout, drive mode, display RAM filling order, and display data transmitted over the I^2C-bus 22
Fig 14. RAM banks in static and multiplex driving mode 1:2 26
Fig 15. Bank selection 26
Fig 16. Example of the Bank-select command with multiplex drive mode 1:2 27
Fig 17. Bit transfer 28
Fig 18. Definition of START and STOP conditions. 28
Fig 19. System configuration 29
Fig 20. Acknowledgement of the I^2C-bus 29
Fig 21. I^2C-bus protocol 31
Fig 22. Format of command byte 31
Fig 23. Device protection circuits 32
Fig 24. Typical I_{DD} with respect to V_{DD} 35
Fig 25. Driver timing waveforms 37
Fig 26. I^2C-bus timing waveforms 37
Fig 27. Cascaded PCF85176 configuration 39
Fig 28. Synchronization of the cascade for the various PCF85176 drive modes 40
Fig 29. Package outline SOT357-1 (TQFP64) of PCF85176H 41
Fig 30. Package outline SOT364-1 (TSSOP56) of PCF85176T 42
Fig 31. Temperature profiles for large and small components 46
Fig 32. Footprint information for reflow soldering of SOT357-1 (TQFP64) of PCF85176H. 47
Fig 33. Footprint information for reflow soldering of SOT364-1 (TSSOP56) of PCF85176T 48

All information provided in this document is subject to legal disclaimers.

© NXP Semiconductors N.V. 2015. All rights reserved.

28. Contents

1 General description 1
2 Features and benefits 1
3 Ordering information 2
3.1 Ordering options 2
4 Marking 2
5 Block diagram 3
6 Pinning information 4
6.1 Pinning 4
6.2 Pin description 5
7 Functional description 6
7.1 Commands of PCF85176 6
7.1.1 Command: mode-set 7
7.1.2 Command: load-data-pointer 7
7.1.3 Command: device-select 8
7.1.4 Command: bank-select 8
7.1.5 Command: blink-select 9
7.1.5.1 Blinking 9
7.2 Power-On Reset (POR) 10
7.3 Possible display configurations 11
7.3.1 LCD bias generator 12
7.3.2 Display register 12
7.3.3 LCD voltage selector 12
7.3.3.1 Electro-optical performance 14
7.3.4 LCD drive mode waveforms 15
7.3.4.1 Static drive mode 15
7.3.4.2 1:2 Multiplex drive mode 16
7.3.4.3 1:3 Multiplex drive mode 18
7.3.4.4 1:4 Multiplex drive mode 19
7.4 Oscillator 20
7.4.1 Internal clock 20
7.4.2 External clock 20
7.4.3 Timing 20
7.5 Backplane and segment outputs 20
7.5.1 Backplane outputs 20
7.5.2 Segment outputs 20
7.6 Display RAM 21
7.6.1 Data pointer 23
7.6.2 Subaddress counter 23
7.6.3 RAM writing in 1:3 multiplex drive mode 24
7.6.4 Writing over the RAM address boundary 25
7.6.5 Bank selection 25
7.6.5.1 Output bank selector 25
7.6.5.2 Input bank selector 25
7.6.5.3 RAM bank switching 25
8 Characteristics of the I²C-bus 28
8.1 Bit transfer 28
8.2 START and STOP conditions 28
8.3 System configuration 28
8.4 Acknowledge 29
8.5 I²C-bus controller 30
8.6 Input filters 30
8.7 I²C-bus protocol 30
9 Internal circuitry 32
10 Safety notes 33
11 Limiting values 33
12 Static characteristics 34
13 Dynamic characteristics 36
14 Application information 38
14.1 Cascaded operation 38
15 Package outline 41
16 Handling information 43
17 Packing information 44
17.1 Tape and reel information 44
18 Soldering of SMD packages 44
18.1 Introduction to soldering 44
18.2 Wave and reflow soldering 44
18.3 Wave soldering 45
18.4 Reflow soldering 45
19 Footprint information 47
20 Appendix 49
20.1 LCD segment driver selection 49
21 Abbreviations 51
22 References 52
23 Revision history 52
24 Legal information 53
24.1 Data sheet status 53
24.2 Definitions 53
24.3 Disclaimers 53
24.4 Trademarks 54
25 Contact information 54
26 Tables 55
27 Figures 56
28 Contents 57

Please be aware that important notices concerning this document and the product(s) described herein, have been included in section 'Legal information'.

© NXP Semiconductors N.V. 2015. All rights reserved.

For more information, please visit: http://www.nxp.com
For sales office addresses, please send an email to: salesaddresses@nxp.com

Date of release: 6 January 2015
Document identifier: PCF85176

Mouser Electronics

Authorized Distributor

Click to View Pricing, Inventory, Delivery & Lifecycle Information:

NXP:

PCF85176H/1,518 PCF85176T/1,118