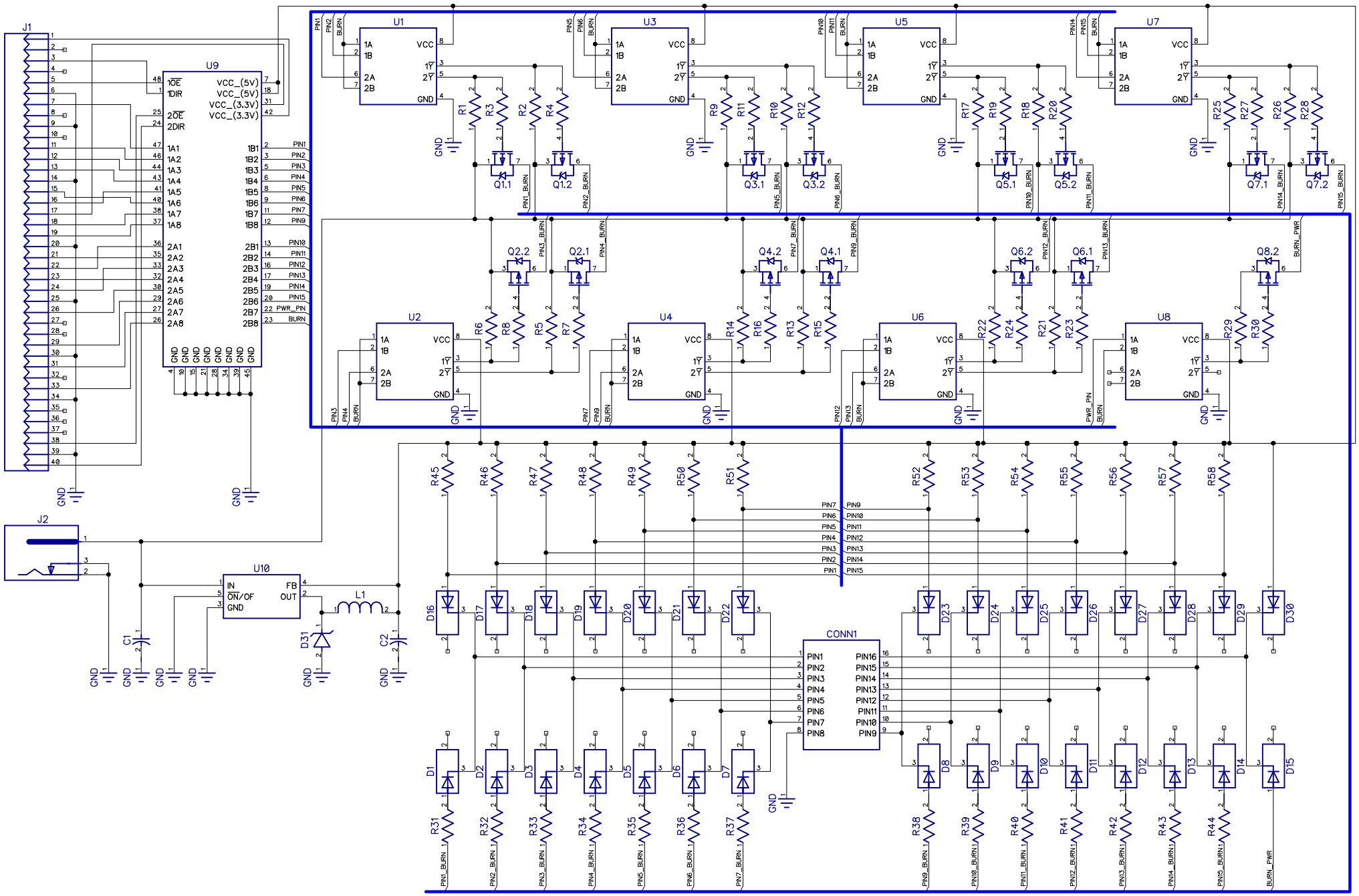
J1
J2
U1
U2
U3
U4
U5
U6
U7
U8
U9
U10
CONN1
L1
C1
C2
GND
VCC_(5V)
VCC_(3.3V)
PWR_PIN
BURN
BURN_PWR