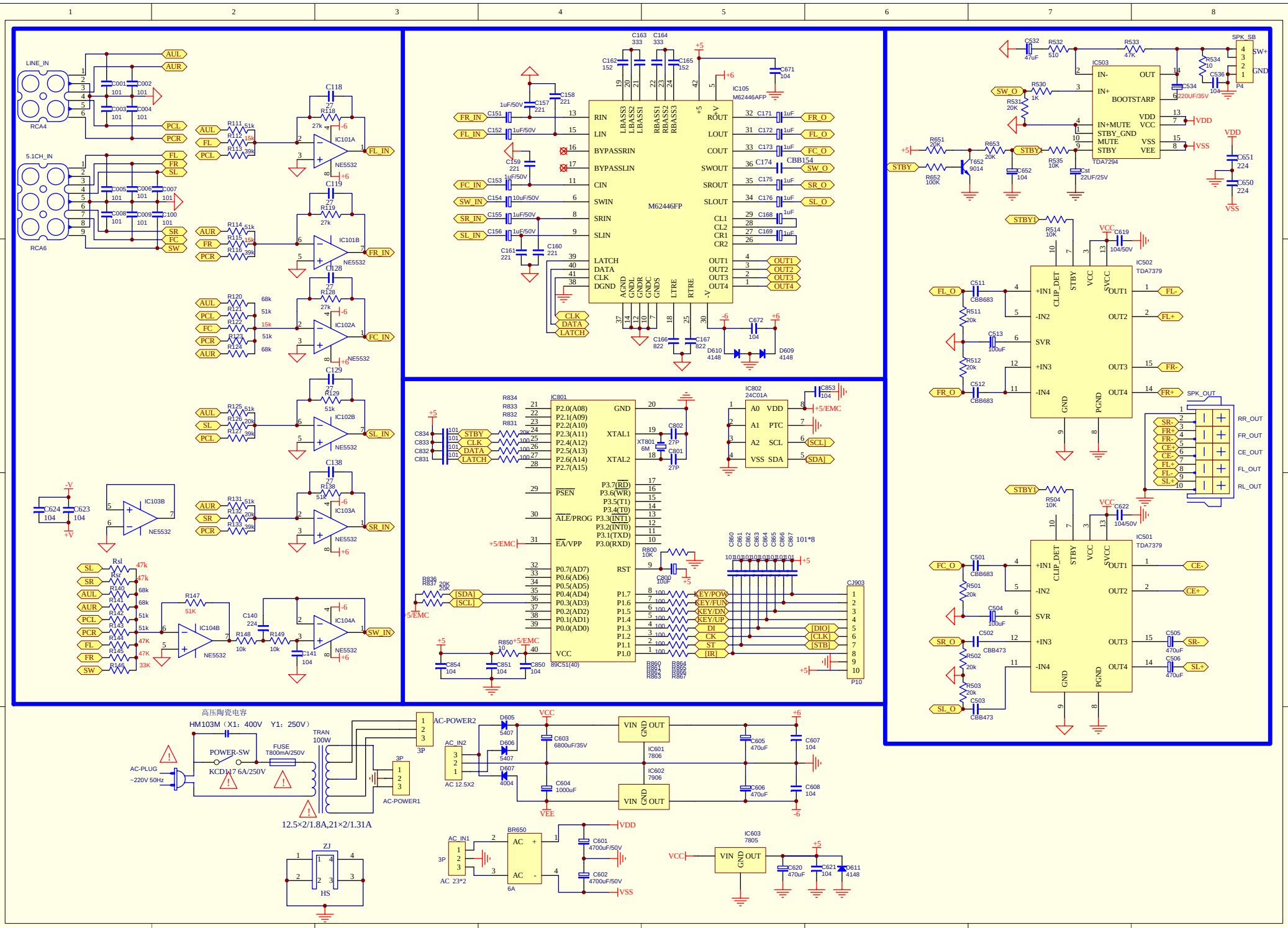
LINE_IN
RCA4
5.1CH_IN
RCA6
AUL
AUR
PCL
PCR
FL
FR
SL
SR
FC
SW
NE5532
IC101A
IC101B
IC102A
IC102B
IC103A
IC103B
IC104A
IC104B
FL_IN
FR_IN
FC_IN
SL_IN
SR_IN
SW_IN
M62446FP
IC105
M62446AFP
RIN
LIN
BYPASSRIN
BYPASSLIN
CIN
SWIN
SRIN
SLIN
LATCH
DATA
CLK
DGND
ROUT
LOUT
COUT
SWOUT
SROUT
SLOUT
OUT1
OUT2
OUT3
OUT4
FR_O
FL_O
FC_O
SW_O
SR_O
SL_O
IC801
89C51(40)
STBY
CLK
DATA
LATCH
PSEN
ALE/PROG
EA/VPP
RST
VCC
GND
XTAL1
XTAL2
P3.7(RD)
P3.6(WR)
P3.5(T1)
P3.4(T0)
P3.3(INT1)
P3.2(INT0)
P3.1(TXD)
P3.0(RXD)
P0.7(AD7)
P0.6(AD6)
P0.5(AD5)
P0.4(AD4)
P0.3(AD3)
P0.2(AD2)
P0.1(AD1)
P0.0(AD0)
P1.7
P1.6
P1.5
P1.4
P1.3
P1.2
P1.1
P1.0
[SDA]
[SCL]
IC802
24C01A
A0
A1
A2
VSS
VDD
PTC
SCL
SDA
KEY/POW
KEY/FUN
KEY/DN
KEY/UP
DI
CK
ST
[IR]
[DIO]
[CLK]
[STB]
CJ903
P10
IC503
TDA7294
BOOTSTARP
IN-
IN+
IN+MUTE
STBY_GND
MUTE
STBY
OUT
VDD
VCC
VSS
VEE
SPK_SB
SW+
GND
P4
IC502
TDA7379
CLIP_DET
STBY
VCC
SVCC
+IN1
-IN2
SVR
+IN3
-IN4
OUT1
OUT2
OUT3
OUT4
PGND
FL-
FL+
FR-
FR+
SPK_OUT
RR_OUT
FR_OUT
CE_OUT
FL_OUT
RL_OUT
IC501
CE-
CE+
SR-
SL+
高压陶瓷电容
HM103M（X1：400V Y1：250V）
POWER-SW
KCD1-17 6A/250V
FUSE
T800mA/250V
TRAN
100W
AC-PLUG
~220V 50Hz
AC-POWER2
AC-POWER1
3P
12.5×2/1.8A,21×2/1.31A
AC_IN2
AC 12.5X2
IC601
7806
IC602
7906
VIN
GND
OUT
AC_IN1
AC_23*2
BR650
6A
AC
ZJ
HS
IC603
7805