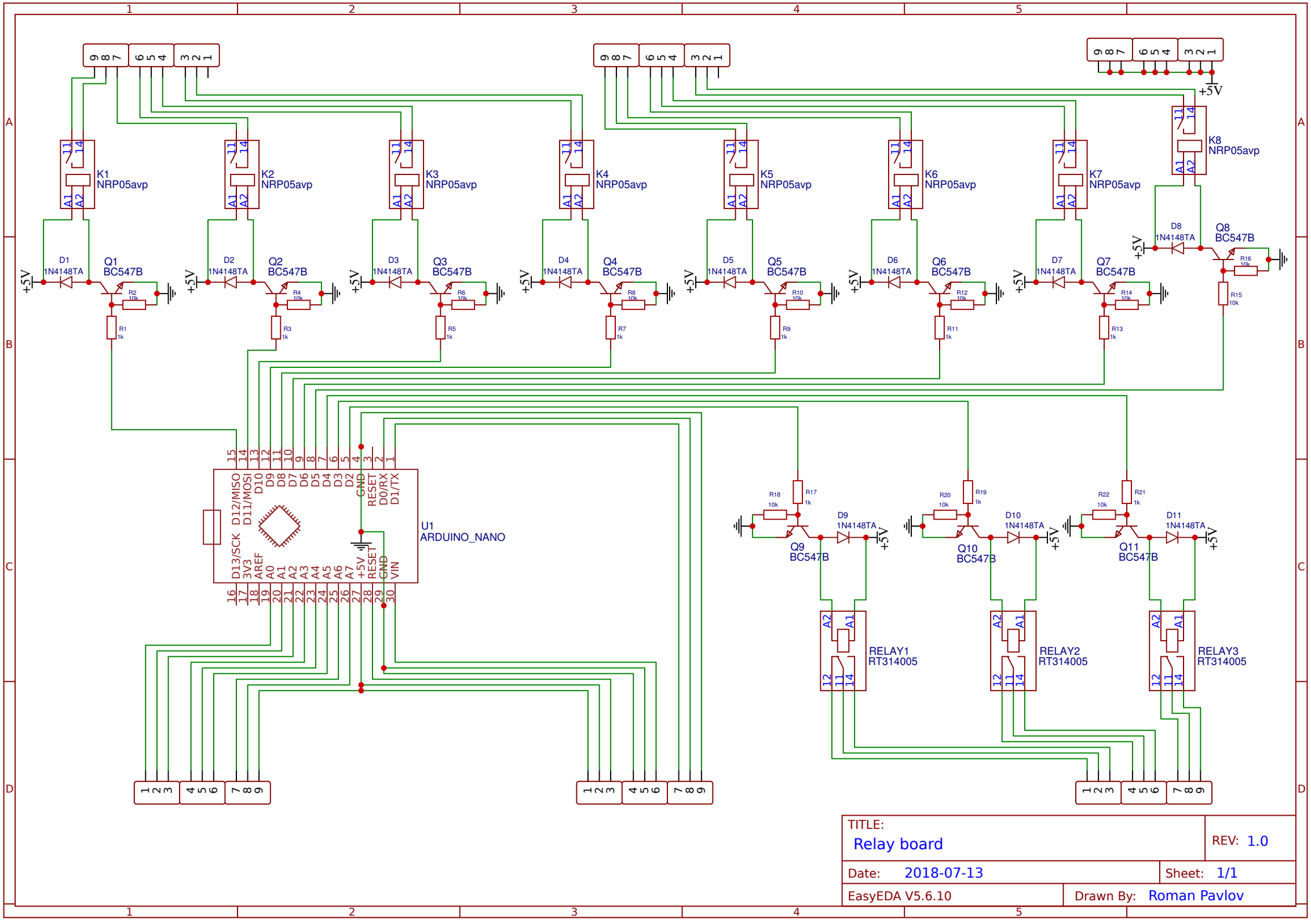
K1 NRP05avp
K2 NRP05avp
K3 NRP05avp
K4 NRP05avp
K5 NRP05avp
K6 NRP05avp
K7 NRP05avp
K8 NRP05avp
D1 1N4148TA
D2 1N4148TA
D3 1N4148TA
D4 1N4148TA
D5 1N4148TA
D6 1N4148TA
D7 1N4148TA
D8 1N4148TA
D9 1N4148TA
D10 1N4148TA
D11 1N4148TA
Q1 BC547B
Q2 BC547B
Q3 BC547B
Q4 BC547B
Q5 BC547B
Q6 BC547B
Q7 BC547B
Q8 BC547B
Q9 BC547B
Q10 BC547B
Q11 BC547B
R1 1k
R2 10k
R3 1k
R4 10k
R5 1k
R6 10k
R7 1k
R8 10k
R9 1k
R10 10k
R11 1k
R12 10k
R13 1k
R14 10k
R15 10k
R16 10k
R17 1k
R18 10k
R19 1k
R20 10k
R21 1k
R22 10k
U1 ARDUINO_NANO
RELAY1 RT314005
RELAY2 RT314005
RELAY3 RT314005
+5V
TITLE:
Relay board
REV: 1.0
Date: 2018-07-13
Sheet: 1/1
EasyEDA V5.6.10
Drawn By: Roman Pavlov