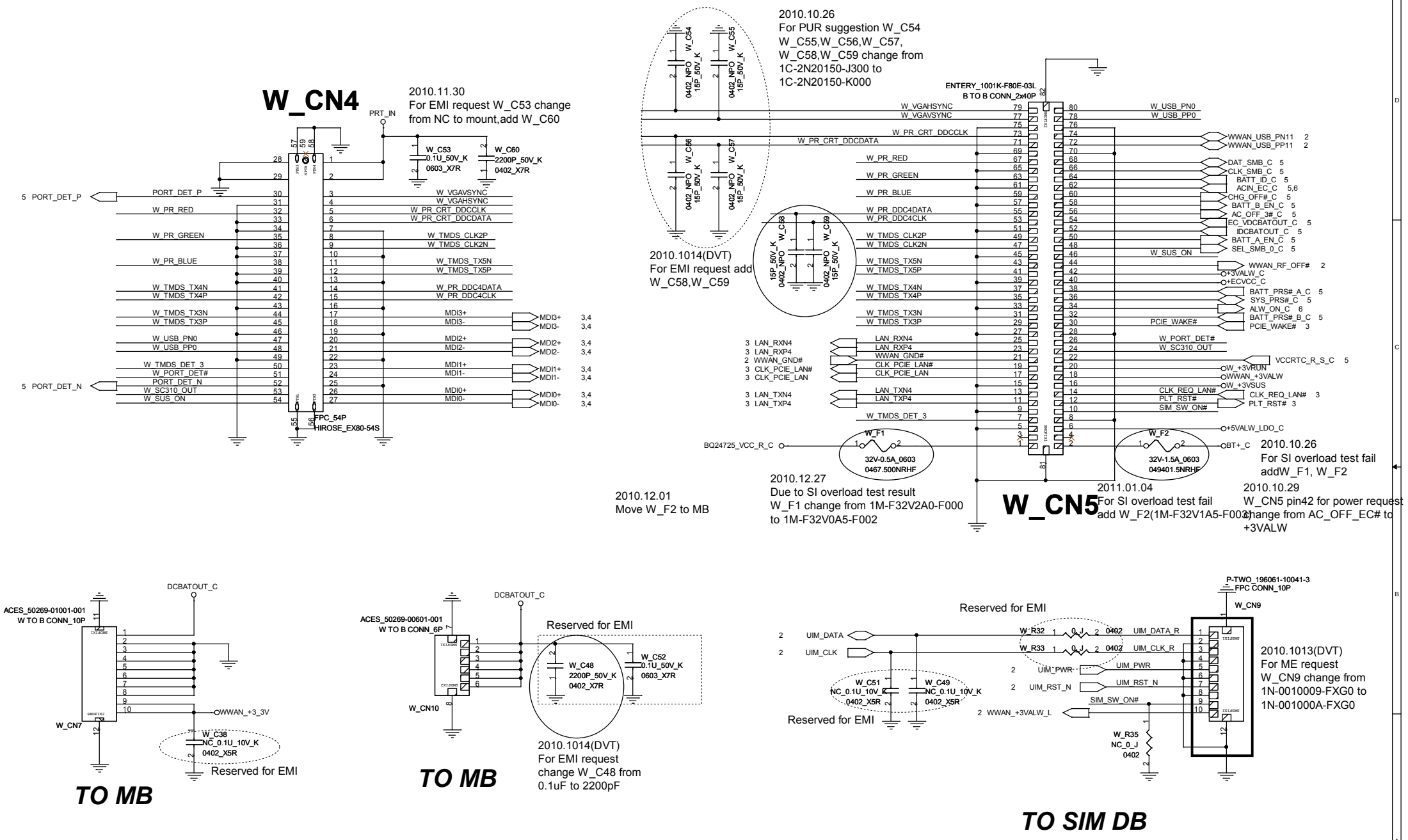
W_CN4
2010.11.30
For EMI request W_C53 change from NC to mount,add W_C60
PRT_IN
W_C53 0.1U_50V_K 0603_X7R
W_C60 2200P_50V_K 0402_X7R
FPC_54P
HIROSE_EX80-54S
2010.10.26
For PUR suggestion W_C54 W_C55,W_C56,W_C57, W_C58,W_C59 change from 1C-2N20150-J300 to 1C-2N20150-K000
2010.1014(DVT)
For EMI request add W_C58,W_C59
ENTERY_1001K-F80E-03L
B TO B CONN_2x40P
W_CN5
W_F1 32V-0.5A_0603 0467.500NRHF
W_F2 32V-1.5A_0603 049401.5NRHF
2010.12.27
Due to SI overload test result W_F1 change from 1M-F32V2A0-F000 to 1M-F32V0A5-F002
2010.12.01
Move W_F2 to MB
2011.01.04
For SI overload test fail add W_F2(1M-F32V1A5-F003)
2010.10.26
For SI overload test fail addW_F1, W_F2
2010.10.29
W_CN5 pin42 for power request change from AC_OFF_EC# to +3VALW
ACES_50269-01001-001
W TO B CONN_10P
W_CN7
DCBATOUT_C
WWAN_+3_3V
W_C38 NC_0.1U_10V_K 0402_X5R
Reserved for EMI
TO MB
ACES_50269-00601-001
W TO B CONN_6P
W_CN10
W_C48 2200P_50V_K 0402_X7R
W_C52 0.1U_50V_K 0603_X7R
2010.1014(DVT)
For EMI request change W_C48 from 0.1uF to 2200pF
TO MB
P-TWO_196061-10041-3
FPC CONN_10P
W_CN9
W_R32 0_J 0402
W_R33 0_J 0402
W_C51 NC_0.1U_10V_K 0402_X5R
W_C49 NC_0.1U_10V_K 0402_X5R
W_R35 NC_0_J 0402
2010.1013(DVT)
For ME request W_CN9 change from 1N-0010009-FXG0 to 1N-001000A-FXG0
TO SIM DB
FOXCONN
HON HAI Precision Ind. Co., Ltd.
CCPBG - R&D Division
Title DB Connector(Docking)
Size A3
Document Number V030
Rev SA
Date: Tuesday, January 04, 2011
Sheet 1 of 10

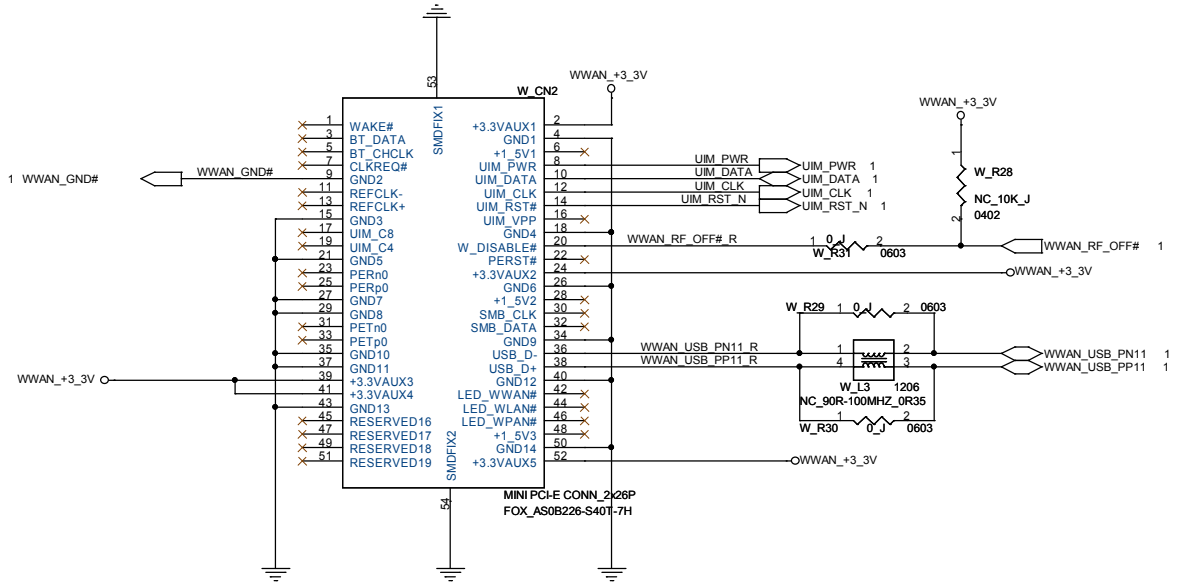

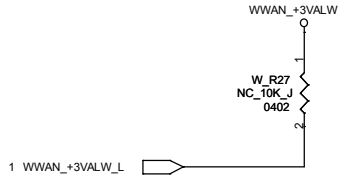

Add follow MOR request IRX-5580_Wireless-Schematics-Guideline_r050_100701_dist.pptx

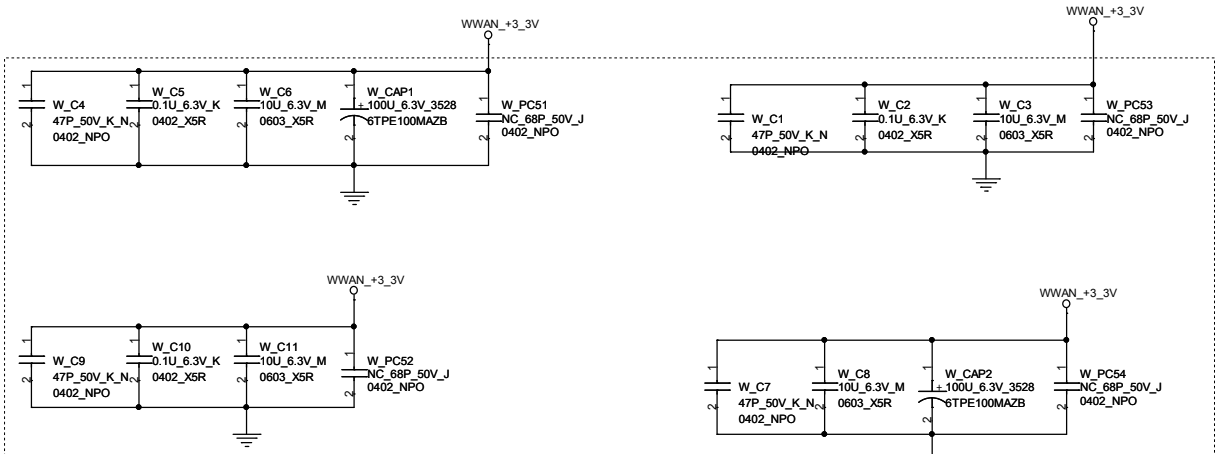

EMI for RF

Place close to W_CN2,if the capcitor value is small

FOXCONN	HON HAI Precision Ind. Co., Ltd. CCPBG - R&D Division	
Title	Mini-card 3G	
Size A3	Document Number V030	Rev SA
Date: Wednesday, December 01, 2010	Sheet 2 of 10	

The +3VSUS Power trace connected to +AVDD33_REG must be wider than 40mils

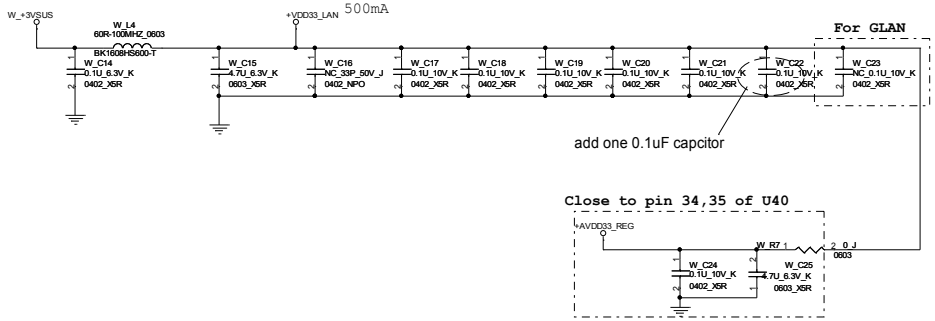

RSET trace need ground trace around.

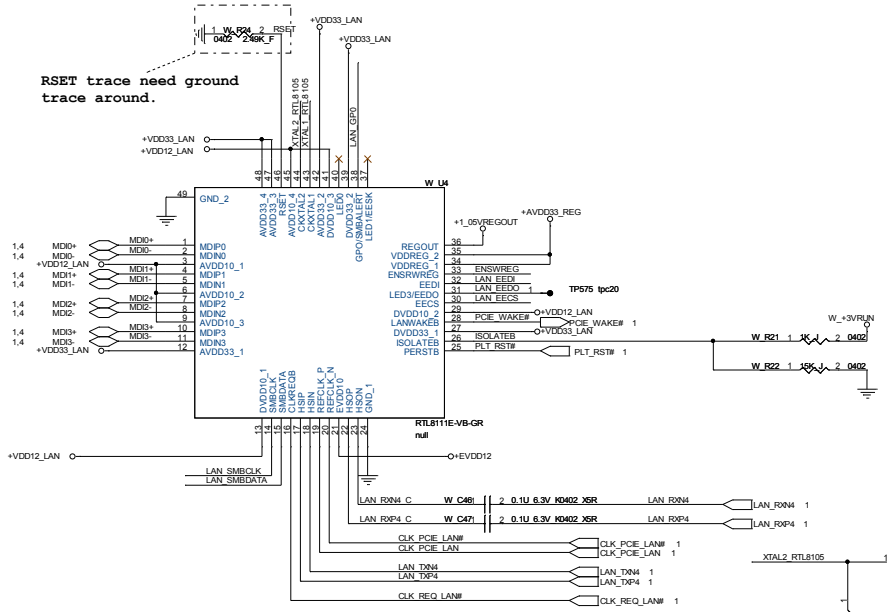

Output from LAN chip

The Output power trace out of +1_05VREGOUT must be wider than 60 mils

Need confirm

Close to pin 36 of U40

Close to pin 21 of U40

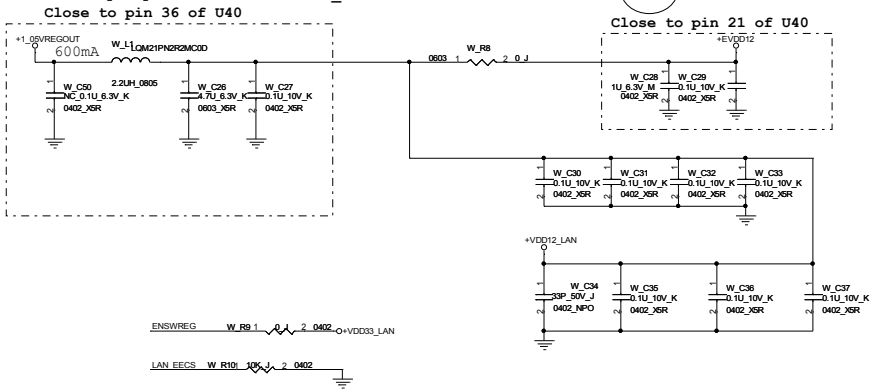

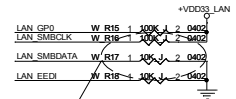

Using eFUSE without ASF

For RTL8111E mounted R16&R17

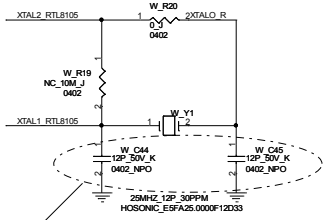

2010.10.16
For craystal clock issue
W_C44,W_C45 change
from 27pF to 22pF

2010.11.21
For SI crystal test fail
W_C44,W_C45 change
from 22pF(1C-2N20220-J000)
to 12pF(1C-2N20120-K000)

FOXCONN	HON HAI Precision Ind. Co., Ltd. CCPBG - R&D Division		
Title	LAN D		
Size A2	Document Number V030		Rev SA
Date: Wednesday, December 01, 2010	Sheet 3 of 10		

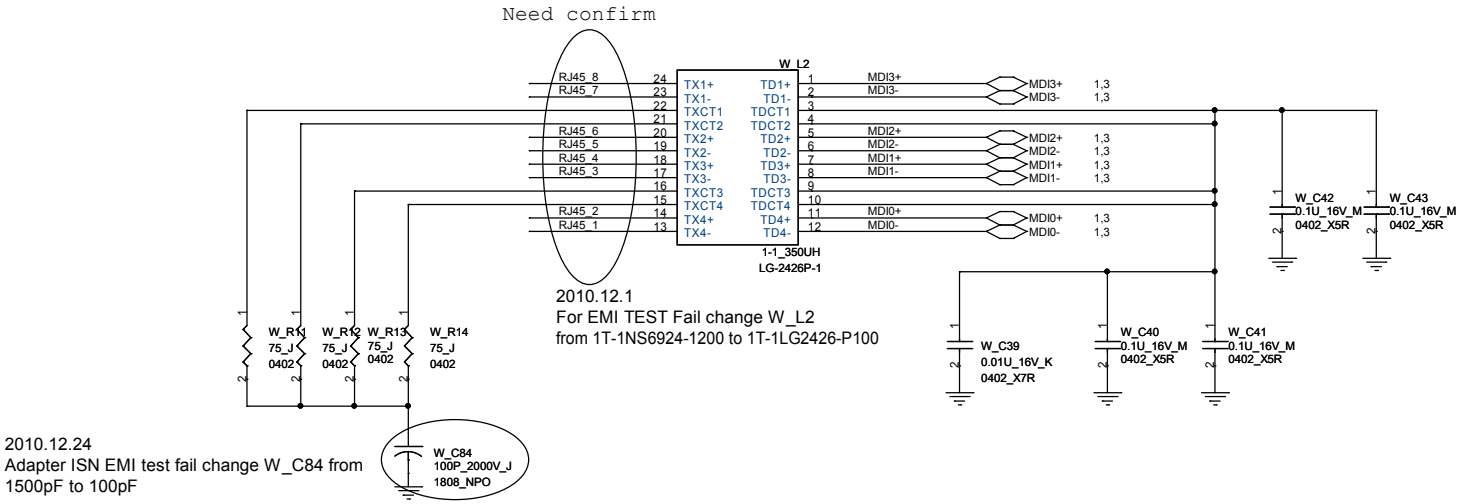

2010.12.1
For EMI TEST Fail change W_L2
from 1T-1NS6924-1200 to 1T-1LG2426-P100

2010.12.24
Adapter ISN EMI test fail change W_C84 from
1500pF to 100pF

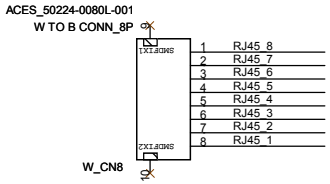

RJ45

FOXCONN	HON HAI Precision Ind. Co., Ltd. CCPBG - R&D Division	
Title	***Transformer***	
Size A3	Document Number ***V030***	Rev ***SA***
Date: Wednesday, January 05, 2011	Sheet 4 of 10	

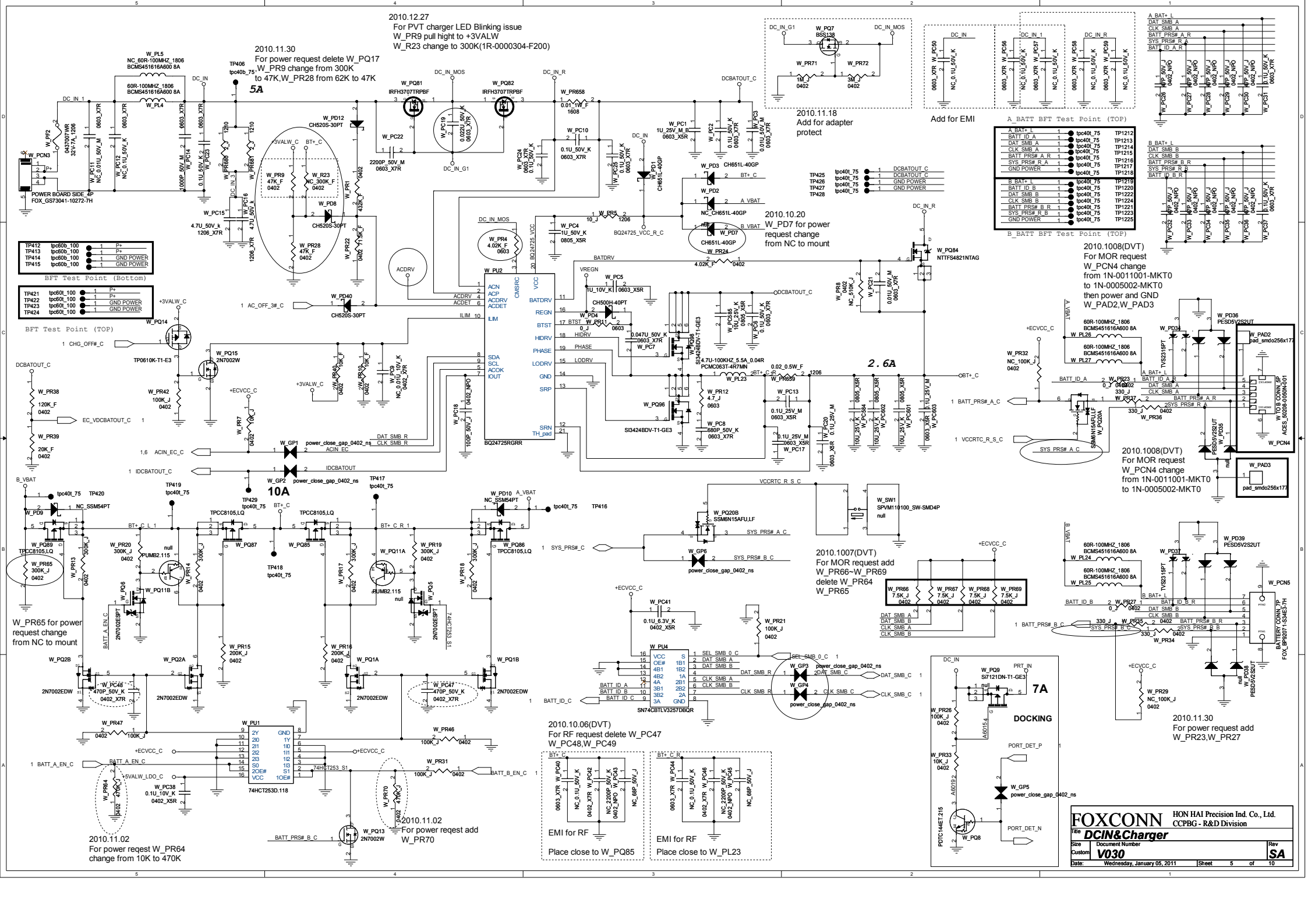
2010.12.27
For PVT charger LED Blinking issue
W_PR9 pull hight to +3VALW
W_R23 change to 300K(1R-0000304-F200)
2010.11.30
For power request delete W_PQ17
W_PR9 change from 300K
to 47K,W_PR28 from 62K to 47K
5A
2010.11.18
Add for adapter
protect
Add for EMI
2010.10.20
W_PD7 for power
request change
from NC to mount
2.6A
2010.1008(DVT)
For MOR request
W_PCN4 change
from 1N-0011001-MKT0
to 1N-0005002-MKT0
then power and GND
W_PAD2,W_PAD3
2010.1008(DVT)
For MOR request
W_PCN4 change
from 1N-0011001-MKT0
to 1N-0005002-MKT0
10A
W_PR65 for power
request change
from NC to mount
2010.1007(DVT)
For MOR request add
W_PR66~W_PR69
delete W_PR64
W_PR65
7A
DOCKING
2010.11.30
For power request add
W_PR23,W_PR27
2010.11.02
For power reqest W_PR64
change from 10K to 470K
2010.11.02
For power reqest add
W_PR70
2010.10.06(DVT)
For RF request delete W_PC47
W_PC48,W_PC49
EMI for RF
Place close to W_PQ85
EMI for RF
Place close to W_PL23
BFT Test Point (Bottom)
BFT Test Point (TOP)
A_BATT BFT Test Point (TOP)
B_BATT BFT Test Point (TOP)
POWER BOARD SIDE_4P
FOX_GS73041-10272-7H
BQ24725RGRR
SN74CBTLV3257DBQR
74HCT253D.118
BATTERY CONN_7P
FOX_BP3207-1-S34E3-7H
W TO B CONN_5P
ACES_50208-0050N-001
FOXCONN
HON HAI Precision Ind. Co., Ltd.
CCPBG - R&D Division
Title DCIN&Charger
Size Custom
Document Number V030
Rev SA
Date: Wednesday, January 05, 2011
Sheet 5 of 10

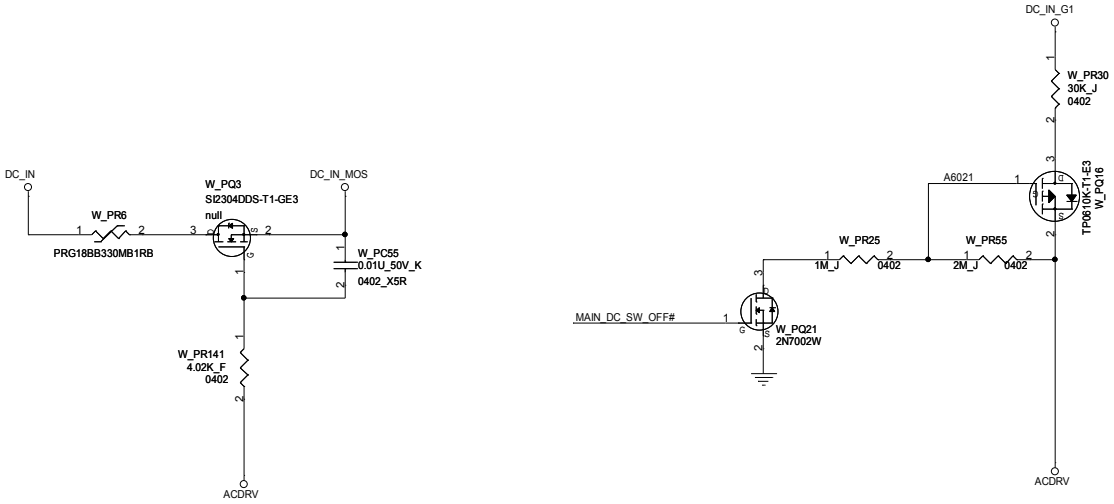

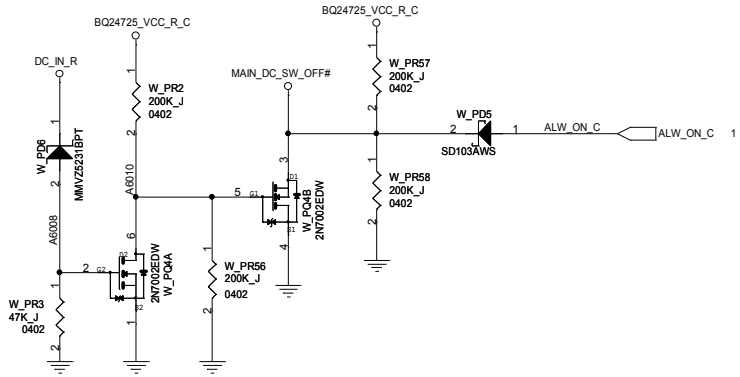

2010.11.25(PVT)
For cost reason Delete zero standby circuit W_PR45,W_PR50,W_PR53,W_PR43,W_PR44,W_PR52
W_PR62,W_PR41,W_PR63,W_PR61,W_PC39,W_PU5,W_PU3,W_PQ19,W_PQ18

10/08/21 Modify SCP circuit.

FOXCONN	HON HAI Precision Ind. Co., Ltd. CCPBG - R&D Division	
Title	OVP protection	
Size: Custom	Document Number: V030	Rev: SA
Date: Wednesday, December 01, 2010	Sheet 6 of 10	

(2010/04/04)
P.03 {DCIN&Charger} Change the charger IC from OZ864LN to BQ24725RGRR.
P.04 {OVP protection} Delete OVP circuit because of bq24725 also had this function.
P.04 {OVP protection} Add W_PQ7A,W_PQ7B,W_PR138,W_PR140 for level shift following the design variation.

(2010/04/25)
P.01 {Mini-Card 3G} Delete W_CN3. W_CN1 pin 7/8 add net USB_SIM+/USB_SIM-
P.02 {BTB CONN DB} Change a USB3.0 port to a PCIE port

(2010/04/26)
P.01 {Mini-Card 3G} Unify all ground to Ch_GND for layout conveniency.
P.02 {BTB CONN DB} Unify all ground to Ch_GND for layout conveniency.
P.03 {DCIN&Charger} unify all ground to Ch_GND for layout conveniency.
P.03 {DCIN&Charger} Change the size of W_PR23 from 0402 to 0603.
P.03 {DCIN&Charger} Add W_PU1 for dual battery select.
P.04 {OVP protection} Unify all ground to Ch_GND for layout conveniency.

(2010/05/03)
P.05 {BTB CONN DB} Add LED DB CONN and LED control circuit

(2010/05/04)
P.05 {BTB CONN DB} Move LED DB CONN and LED control circuit to MB side

P.01 {Mini-Card 3G} Change W_CN2 to 1N-1052000-0000

(2010/05/10)
P.02 {BTB CONN DB} For MOR request change DOCKONG connector from 74 pins to 54 pins,the connector HHP/N change from 1N-0070000-M0G0 to 2N-0054000-MKG0
P.03 Power add W_PR8
P.03 follow Connector list W_CN1 change from 1N-0006004-FKG0 to 1N-0006007-FKG0
P.04 Add W_PU3,W_PQ10,W_PQ12,W_PC39 and change W_PR141 to W_PD3 for Zero Standby requirement.

P.02 USB3.0 HOST change to USB HUB delete W_PR_PLT_RST#
P.02 Docking connector to RJ45 connector delete W_PR_CLK_REQ_LAN#

(2010/05/11)
P.02 W_CN7 add pin5 for WWAN_+3VALW power

P.04 W_PC39 DC rated voltage change from 6.3V to 10V

(2010/05/12)
P.01,P.02 W_CN2 Pin20 signal change from WWAN_EN to WWAN_RF_OFF#

P.01 follow layout request W_CN1 change from 1N-0006007-FKG0 to 1N-0006004-FKG0

P.02 Docking CN follow EMI request update pin define

(2010/05/14)
P.02 Docking DB use WWAN_PWREN&WWAN_RF_OFF# W_CN5 add WWAN_RF_OFF# signal
P.02 For EMI W_CN5 pin define updated
P.03 Change W_PQ81,WPQ82 from Si7326DN-T1-GE3 to IRFH3707TRPbF for large current require.
P.03 Change W_PD2 from UMN11N to two pcs CH520S-30PT for large current require.
P.03 Change W_PR5 from 10_F_1206 to 10_J_1206 for cost down.
P.03 Change W_PF2 from 0429007.WRML to 0437007.WR for PUR request.
P.03 Change W_PR11 from 0_J_0402 to 0_J_0603.
P.03 Change W_PC18 from C1005X7R101KGT to CC0402JRNPO9BN101 for PUR suggest.
P.04 Power change W_PQ3&W_PC39

(2010/05/15)
P.03 Change W_PQ5,W_PQ6 from 2N7002W to 2N7002ESPT for PUR suggest.
P.03 Add SMBUS selete circuit for MOR request

(2010/05/18)
P.03 Change signal SELECT_BAT_A/B_C to BATT1/2_EN_C
P.03 W_PR38&W_PR39 change from NC to stuff

(2010/05/19)
P.03 Change PC1,PR1 to W_PC1,W_PR1
P.01 For ME request change W_CN7 from 1N-0007001-FKG0 to 1N-0014004-FKG0

(2010/05/20)
P.03 Re-net W_PQ8,W_PQ9,W_PR26,W_PR33,W_PR27.
P.03 Stuff W_PR38,W_PR39.
P.03 Change net EC_IOUT_C to EC_IADAPT_C.

P.03 Incorporate the SMBus BQ24725_SDA_SMB_C,BQ24725_SCL_SMB_C to DAT_SMB_C,CLK_SMB_C

P.03 Change W_PQ1,W_PQ2 from 2N7002DW to 2N7002EDW for PUR suggest.

P.03 Change W_PC4 from 0402B105K500CT to UMK212BJ105KG-T for PUR suggest.

P.03 Add W_PR9,W_PC40,W_PU5 for battery discharge current sense.

P.03 Change W_PD5 and W_PD30 from 1SS400PT to CH520S-30PT to optimize performance.

P.03 Change W_PQ4,W_PQ7 from 2N7002DW to 2N7002EDW for PUR suggest.

(2010/05/22)
P.03 For power request W_PC19 change from 0.1uF to 0.047uF

P.03 For power request W_PR23 change from 4.02Kohm to 8.06Kohm

(2010/05/24)
P.02 W_CN7 DCBATOUT Pin change from 6pins to 7 pins

P.02 For layout suggestion change W_CN4 from 2N-0054000-MKG0 to 1N-0060002-FXG0

(2010/05/26)
P.03 For MOR request change WWAN power add W_Q1,W_Q2,W_Q3

P.03 For MOR request add LAN and transformer on Docking DB

(2010/05/27)
P.04 For MOR request delete PLT_RST# pull high resistor W_R23

P.04 For MOR request change W_U2 power from WWAN_+3VRUN to WWAN_+3VSUS
P.07 For Power request change W_PD5,W_PD30 change from 16-CH520S3-0P00 to 16-SD103AW-S000

(2010/05/28)
P.04 For Layout request change transformer and RJ45 CN pin define

(2010/05/31)
P.02 LAN from Docking DB to Docking station signal change from RJ45 to MDI

(2010/06/01)
P.04/05 have changed GND to POWER GND
P.02 W_CN9 have changed from 8pin to 10pin
P.03 Follow MOR request for SIM CARD add W_Q6,W_C50,W_R23,W_R25,W_R26,W_R27
P.02 W_CN5 have changed from 70pin(1N-0070000-F0G0) to 80pin(1N-0080001-FWG0)
P.03 Follow MOR request add W_BOSS1,W_BOSS2 for WWAN

(2010/06/02)
P.02 For MOR request W_CN5 add GND pin between WWAN_USB and DAT_SMB
P.02/04 For MOR request change WWAN_+3VSUS to W_+3VSUS
P.06 Change W_PR1 from 649K to 162K for vendor suggest.
P.06 Change W_PR22 from 105K to 26.1K for vendor suggest.
P.06 Add W_PR9,W_PR28,W_PD8 for vendor suggest.
P.06 Change W_PQ84 from NTTFS4823NTWG to NTTFS4821NTAG.
P.06 Change W_PR4 from 4.02K to 8.2K for vendor suggest.
P.06 Delect battery discharge circuit, and change discharge from DCBATOUT to DC_IN_R.
P.06 Change W_PR23 from 8.06K_F to 8.2K_j for cost down.
P.06 Change net name EC_VADAPT_C,EC_IADAPT_C to EC_VDCBATOUT_C,EC_IDCBATOUT_C.
P.06 Change W_PR10,W_PR25 value for charge current change.
P.06 Add W_PR31,W_PR32,W_PQ13 for battery power switch.
P.07 Add W_PU5 to add ALW_ON control Zero Standby.

(2010/06/03)
P.03 For RF request W_C1,4,7,9 change from 1000pF to 47pF
P.02 Change W_CN4 pin define for layout

(2010/06/04)
P.06 Change W_PCN4 For ME request change to 1N-0011001-MKT0 W_PCN5 change to 2N-000700Y-MKG0

(2010/06/05)
P.02 Add W_CN3 for USB3.0 follow MOR requestion

(2010/06/07)
P.02 W_CN4 change to MOR request pin define
P.02 Add W_CN3 for MOR request sperated USB2.0 and USB3.0 signal

(2010/06/08)
P.06 change W_PN4,W_PN5 pin define for ME,Layout request
P.18 L_CN3 add L_LED_BRIGHTNESS signal
P.02 W_CN5 change from 1N-0080001-FWG0 to 1N-0080000-FKG0
P.02 W_CN9 change from 10pin to 12pin

(2010/06/09)
P.07 Add W_PR41 for power requst
P.03 For WWAN power move to MB delete W_Q1,WQ2,W_Q3,W_R2,W_R3,W_R4,W_C12
P.02 Follow ME CN list W_CN4 change to 1N-0054000-FKC0

(2010/06/10)
P.06 For power request change W_PR29,W_PR30 from 10K to 100K
P.06 For power request add W_PR42

(2010/06/11)
P.02 Change W_CN4 pin define for USB3.0 layout
P.03 change W_BOSS1,W_BOSS2 follow ME connector list

(2010/06/12)
P.06 For RF request add W_PC40,W_PC42,W_PC43,W_PC44,W_PC45,W_PC46, W_PC47,W_PC48,W_PC49 for EMI

(2010/06/14)
P.06 For power request change W_PR28 from 68K to 62K
P.06 For power request change EC_IDCBATOUT_C to IDCBATOUT_C
P.07 For power request add W_PR43,W_PR44,W_PR45
P.07 For power request W_PQ3 change to 17-S12303C-DS00

FOXCONN	HON HAI Precision Ind. Co., Ltd. CCPBG - R&D Division	
Title	History Docking	
Size A2	Document Number V030	Rev SA
Date: Wednesday, December 01, 2010	Sheet 7 of 10	

P.06 For MOR request rectify WWAN signal direction
P.06 change W_CN7 pin define consistent with MB
P.03 Follow MOR request add W_R28
(2010/06/15)
P.03 Follow MOR request add W_GP1
P.03 Follow MOR request add W_R29,W_R30 then c-lay with W_L3
P.02 Follow MOR request change W_CN5 pin78 to +3VRUN power
P.04 W_U4 pin26 pull high to +3VRUN power for save LAN CHIP power consumption
(2010/06/16)
P.02 M_CN3 have change follow ME connector list(from 1N-0004008-M1T0 to 1N-000400C-M1T0)
P.31 W_BOSS1,W_BOSS2 have change follow ME connector list(from 1M-1F40M20-1500 to 1M-1F75H45-1700)
P.03 Change W_GP1 to 0ohm W_R31
(2010/06/17)
P.06 Follow power request add 0ohm resistor W_PR48,W_PR49
P.06 Follow power request add 100Kohm resistor W_PR46,W_PR47
P.06 Follow power request W_PR659 change to 0.02ohm
(2010/06/18)
P.06 Follow power request delete W_PR25,W_PR32,W_PR31 change to 100K
P.06 Follow power request add W_PD9,W_PD10
(2010/06/21)
P.03 For RF request add W_PC51,W_PC52,W_PC53,W_PC54
P.31 Follow ME connector list W_BOSS1,W_BOSS2 change to 1M-1F40M20-1500
(2010/06/22)
P.02 Follow EMI suggestion add W_C38,W_C48,W_C52
P.02 Follow EMI suggestion add W_C49,W_C51,W_R22,W_R33
P.06 Follow EMI suggestion add W_PC50,W_PC55~W_PC59
P.02 Follow ME connector list change W_CN9 to 1N-0012007-FKT0
(2010/06/23)
P.06 For PCB space limited delete W_PC55
P.31 Delete W_BOSS2 follow ME DXF
P.03 Follow ME connector list W_CN2 change to 1N-0052005-F1G0
P.05 Add W_R34 for transformer power reserved
(2010/06/24)
P.05 Follow FAE suggestion change W_C25 to 4.7uF
P.02 Change W_CN4 power pin define follow MOR suggestion
P.05 Follow ME connector list change W_CN8 to 1N-0008002-MKT0
P.02 Follow MOR suggestion reserve USB3.0 CN then change connector
from 1N-000400C-M1T0 to 1N-0006009-FXT0
P.07 Follow power request change W_PR225 to 143k,change W_PR226 to 84.5K
P.07 Follow power request Add W_PR229 100K pull low resistor and Add W_PR228 100K resistor
P.04 Follow MOR request change W_R15,W_R16 to 100K
(2010/06/25)
P.02 Follow ME connector list W_CN7 change to 10pin(w_cn7)+6pin(w_cn10)
(2010/06/28)
P.02 W_CN9 change from 12pin to 10pin
P.06 W_PCN5 change to 2N-0004012-MKG0
P.06 Follow power request add power switch circuit
P.02 Delete W_CN3 and testpoint
(2010/06/29)
P.06 W_CN1 follow ME suggestion change from 19-MPU1018-1001 to 19-SPVM110-1000
P.07 Follow power request W_PU3,W_PU5 change to 14-SN74AHC-T113
P.02 W_CN9 follow ME suggestion change to 1N-0010001-F0T0
(2010/07/01)
P.02 For RF request change W_CN9 pin define
P.07 For power request change W_PQ35, W_PR230
(2010/07/02)
P.05 Testpoint change from 40mils to 20mils
P.05 Delete TOP side test point TP150~TP157
P.02 For MOR request delete SIM_HODER# signal
P.03 For MOR request delete W_Q6(17-2N7002E-SP00)
(2010/07/03)
P.06 For Power request W_PQ20 change to 17-SSM3K15-FL00
P.06 For layout request TP1216,TP1217 change from 40mils to 20mils
(2010/07/05)
P.02 For power request change W_CN7,W_CN10 pin define
P.06 For power request change add W_PD12
(2010/07/06)
P.05 For realtek suggestion transformar no need pull high delete W_R34
P.06 For power suggestion W_PR22 change to 71.5K
P.06 For power suggestion W_PD1 change to 16-SSM24GP-0000
P.07 For power suggestion add W_PR51,W_PR52,W_PR53
(2010/07/07)
P.06 For layout space W_PD1 change to 16-CH520S3-0P00
P.06 For power request add W_PR54,W_PR55
P.02 For ME request W_CN4 change to 1N-0054000-FKC0 then change pin define
(2010/07/08)
P.02 For layout request change W_CN4 pin define
(2010/07/10)
P.02 For power request change power UVP circuit
(2010/07/12)
P.07 For power suggestion move power SCP circuit to MB
(2010/07/13)
P.06 For ME request W_PCN5 change from 2N-0004012-MKG0 to 2N-0007013-MKG0
P.04 For EMI request add W_C50
(2010/07/14)
P.03 For MOR request add W_R34 pull high SIM_SW_ON# signal
P.04 For MOR request add W_R35
P.02 For ME request W_CN5 change from 1N-0080000-FKG0 to 1N-0080000-F1G0
P.32 Follow ME connector list W_BOSS1 change to 1M-1F40M20-1502
P.02 For layout request W_CN5 change from 1N-0080000-F1G0 to 1N-0080000-FKG0
(2010/07/15)
P.02 For ME request W_CN5 change from 1N-0080000-FKG0 to 1N-0080001-FKG0
P.02 For EMI request add W_C53
(2010/07/15)
P.07 For power request W_PR141 change to 100K,W_PC55 change to 0.47u
(2010/07/17)
P.03 Delete W_R34 for SIM_SW_ON# have been pull high on EC side
(2010/07/19)
P.02 change W_CN5 pin define
P.02 For MOR request change W_CN7 pin define
(2010/07/22)
P.32 For ME request add W_H6
P.32 Delete W_H1

EVT2
2010/08/03
P.32 [BOSS] Change follow ME connector list W_BOSS1 change from 1M-1F40M20-1502 to 1M-1F40H25-1500
2010/08/11
P.05 [Transformer] For layout request change MS/SD CN test point from 20mil to 40 mil
2010/08/13
P.08 [DB CN] Follow ME connector list M_CN7 change from 1N-0050004-FXT0 to 1N-0050006-FXT0
2010/08/16
P.06 [DCIN&Charger] Change W_PC585,W_PC584,W_PC601,W_PC602 from 1C-2B60106-K000
to 1C-2B70106-K400 for layout space limit requirement.
P.07[OVP] Change W_PR140 from 1R-0000103-F200 to 1R-0001622-F200.
2010/08/18
P.06 [DCIN&Charger] Change W_PR40 for power request
2010/08/20
P.32 [Boss Hole] For MOR request add W_BOSS2
For power request change

P.06 [DCIN&Charger] Add ACDRV power symbol.
P.06 [DCIN&Charger] Change W_PC19 from 0.047uF to 0.022uF.
P.06 [DCIN&Charger] Change W_PR4 from 8.2K to 4.02K.
P.06 [DCIN&Charger] Delect W_PR23.
P.06 [DCIN&Charger] Add W_PR51,W_PR54.
P.06 [DCIN&Charger] Separate battery A and battery B SYS_PRS# signal.
P.06 [DCIN&Charger] Move W_PQ20B and W_PR11 from MB to DB.
P.06 [DCIN&Charger] Change W_PD1,W_PD2,W_PD7 from SD103AWS to SMD24JGP.
2010/08/23
P.02 [DB CN] For ME request W_CN9 change from 1N-0010001-F0T0 to 1N-0010007-FXG0
P.02 [DB CN] W_CN5 change pin define
2010/08/25
P.32 [BOSS Hole] For the layout placing delete W_BOSS2
P.02 [DB CN] W_CN5 for ME request change from 1N-0080001-FKG0 to 1N-0080002-FKG0
P.02 [DB CN] For ME request W_CN9 change from 1N-0010007-FXG0 to 1N-0010001-F0T0
P.02 [DB CN] W_CN5 change pin define
2010/08/26
P.06 [DCIN&Charger] W_PQ20 change from 17-2N7002E-DW00 to 17-SSM6N15-AF00
P.02 [DB CN] W_CN5 for EMI request add W_R54,W_R55,W_R56,W_R57
DVT
2010/09/07
P.07 [OVP] W_PQ3 for PUR suggestion change from 17-S12306B-DS00 to 17-S12304D-DS00
2010/09/16
P.06 [DCIN&Charger] For power request W_PD1,W_PD2,W_PD7 change to 16-CH651L4-0G00
P.06 [DCIN&Charger] For power request add W_PR64,W_PR65
P.02 [DB CN] For ME request W_CN9 change from 1N-0010001-F0T0 to 1N-0010009-FXG0
2010/10/07
P.06 [DCIN&Charger] For RF request delete W_PC47,W_PC48,W_PC49
P.06 [DCIN&Charger] MOR request add W_PR66~W_PR69
2010/10/13
P.05 [DCIN&Charger] For ME request W_CN9 change from 1N-0010009-FXG0 to 1N-001000A-FXG0
2010/10/14
P.01 [DB CN] For EMI request add W_C58,W_C59
2010/10/18
P.06 [DCIN&Charger] For power request add W_PR64,W_PR65
2010/10/19
P.02 [Mini card 3G] W_CAP1,W_CAP2 100uF change to 220uF

2010/10/19
P.01 [DB CN] For PUR suggestion W_C54,W_C55,W_C56,W_C57,W_C58,W_C59 change from 1C-2N20150-J300 to 1C-2N20150-K000

PVT

2010/11/02
P.06 [DCIN&Charger] For power reqest W_PR64 change from 10K to 470K
P.06 [DCIN&Charger] For power reqest add W_PR70

2010/11/18
P.06 [DCIN&Charger] For power reqest Add W_PQ7,W_PR71,W_PR72 for adapter protect

2010/11/18
P.03 [LAN] For SI crystal test fail W_C44,W_C45 change from 22pF(1C-2N20220-J000) to 12pF(1C-2N20120-K000)

2010/11/25
P.06 [DCIN&Charger] For power reqest add W_PR48,W_PR49,W_PR23,W_PR51,W_PR54,W_PR27 change to GAP
P.07 [OVP] For cost reason Delete zero standby circuit W_PR45,W_PR50,W_PR53,W_PR43,W_PR44,W_PR52
W_PR62,W_PR41,W_PR63,W_PR61,W_PC39,W_PU5,W_PU3,W_PQ19,W_PQ18

2010/11/29
P.06 [DCIN&Charger] For power request add W_PQ17 W_R23
P.01 [DB CN] W_CN5 pin42 for power request change from AC_OFF_EC# to +3VALW

2010/11/30
P.01 [DB CN] For EMI request W_C53 change from NC to mount,add W_C60
P.06 [DCIN&Charger] For power request delete W_PQ17,W_PR9 change from 300K to 47K,W_PR28 from 62K to 47K
P.06 [DCIN&Charger] For power request add W_PC47,W_PC48
P.06 [DCIN&Charger] For power request add W_PR23,W_PR27

2010/12/1
P.04 [Transformer] For EMI TEST Fail change W_L2 from 1T-1NS6924-1200 to 1T-1LG2426-P100

MP

2010/12/27
P.06 [DCIN&Charger] For PVT charger LED Blinking issue Delete W_PR9 Add W_R23 1R-0000304-F200
Change W_PR28 from 1R-0000473-F200 to 1R-0000623-F200
P.06 [DCIN&Charger] For PVT charger LED Blinking issue power request W_PR9 pull hight to +3VALW W_R23 change to 300K(1R-0000304-F200)

2010/12/27(2)
P.01 [DB CN] Due to SI overload test result W_F1 change from 1M-F32V2A0-F000 to 1M-F32V0A5-F002

2011/01/04
P.01 [DB CN] For SI overload test fail add W_F2(1M-F32V1A5-F003)

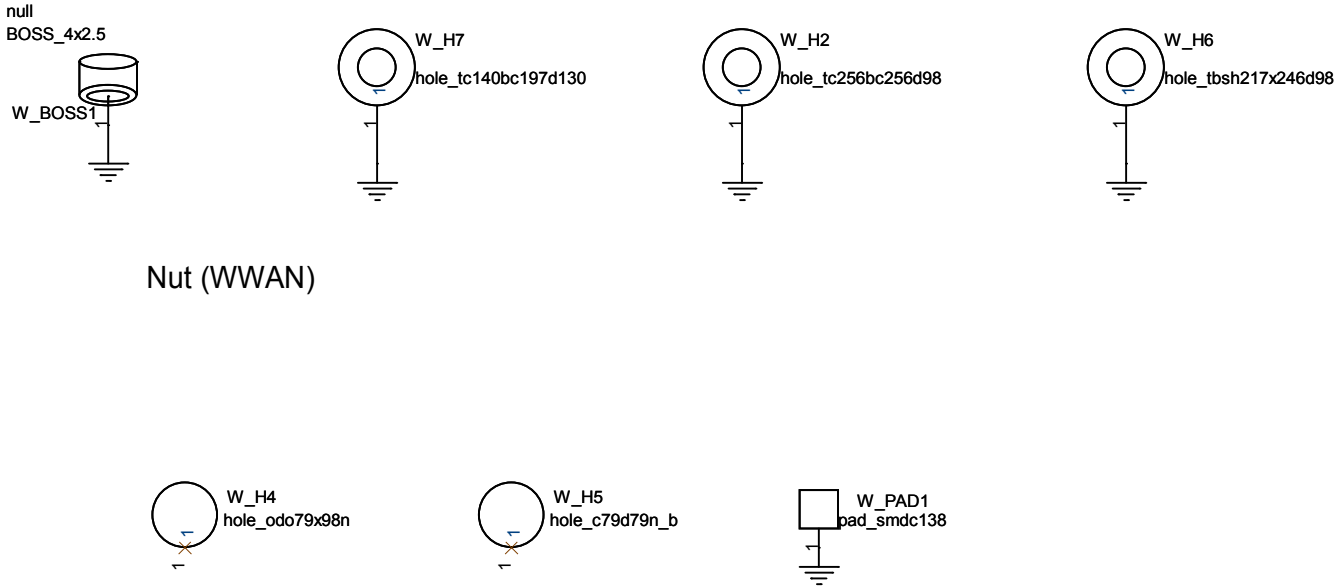

FOXCONN	HON HAI Precision Ind. Co., Ltd. CCPBG - R&D Division	
Title	**BOSS NUT**	
Size A4	Document Number **V030**	Rev **SA**
Date: Wednesday, December 01, 2010	Sheet 10 of 10	

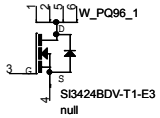

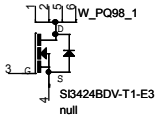

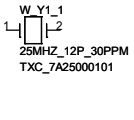

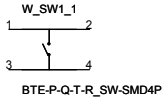

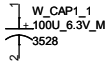

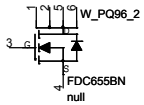

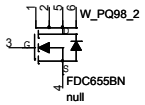

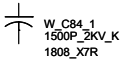

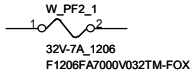

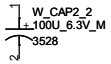

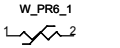

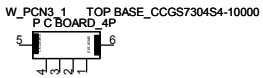

FOXCONN	HON HAI Precision Ind. Co., Ltd. CCPBG - R&D Division	
Title	**2nd source**	
Size A3	Document Number **V030**	Rev **SA**
Date: Friday, December 24, 2010	Sheet 11 of 11	