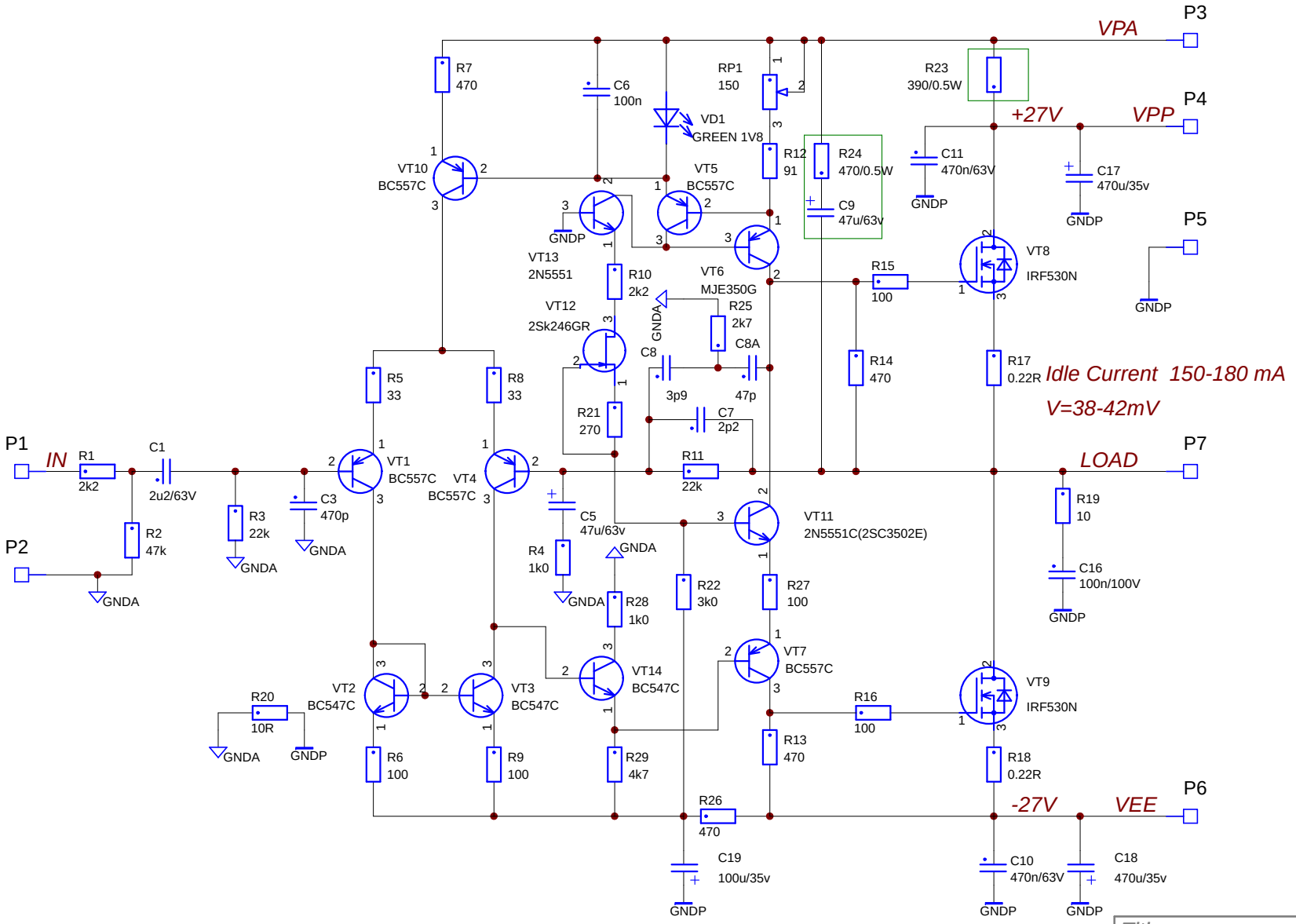


| | | |
|---|---|---|
| Title | EMIXC Mosfet Power Amplifier_Mid_Voltage Supply | |
| Size A4 | Number | Rev 2.1EF01 |
| Date 10.11.2018 | | Drawn by EMIXC |
| Filename | | Sheet of |